Ref 71F

Unasylva

AN INTERNATIONAL REVIEW OF FORESTRY AND FOREST PRODUCTS

VOLUME 14, NUMBER 2, 1960

19 JUL 1960

Unasylva

1960 - Volume 14 **Number 2**

The Forest in Land Planning and Land Use *51*

FAO Staff

Watershed Management in the World Picture *56*

Herbert Storey

Economics and the Use of Land for Forestry *61*

J. J. MacGregor

Methods and Machines used in North American Nurseries *65*

Roland Rotty

The Work of FAO

FAO/IUFRO Committee on Bibliography *84*

Wood Preservation *85*

Asia Pacific Forestry Commission *86*

Equipment Section *89*

News of the World *92*

Annual subscription: U.S. $2.50 or 12s. 6d.
Single copy: U.S. $0.65 or 3s. 3d.

Rates can be paid in local currencies when orders are placed through the authorized sales agents listed on the back cover.

FAO — The Food and Agriculture Organization of the United Nations — grew out of a United Nations Conference held at Hot Springs, Virginia, U.S.A., in May 1943. The nations agreed to work together to secure a lasting peace through freedom from want. The Organization was formally founded at Quebec, Canada, in October 1945. It was located at Washington D.C. until 1951 when the Headquarters office was moved to Rome.

Unasylva is prepared by the Forestry and Forest Products Division, directed by Mr. Egon Glesinger, and published every quarter in English, French and Spanish. It attempts to cover a range of interest which is as wide as that of the Division whose work it mirrors. Signed articles express the opinions of the authors and do not necessarily represent the views of the Organization. All material in ***Unasylva*** may be freely reprinted, but acknowledgment is requested, together with a copy of the publication containing the reprint.

Cover photograph. *Over the past 10 years a considerable area around Addis Ababa, capital of Ethiopia, has been withdrawn from agriculture and planted with* Eucalyptus *species, which coppice easily and provide a most profitable form of land-use in terms of fuel and poles. Here a camel delivers a load of eucalypt billets in a street of Addis Ababa.*

Courtesy, W. Bosshard

Unasylva

An International Review of Forestry and Forest Products

WATERSHED MANAGEMENT

Famine can be caused by too much water or too little. Water is needed for irrigated agriculture in arid areas. Ever-growing urban concentrations and modern industries need fantastic quantities of water.

Every year water-induced erosion ruins stupendous amounts of topsoil. Every year floods destroy vast property values and take a heavy toll of human life. Rivers are polluted with the effluent of thousands of cities, or are silting up and blocking navigation.

In human affairs, therefore, water plays a vital part. If properly cared for, it is the bringer of life. If neglected, it can be the cause of disaster.

Controlling water in amount, regular flow and purity, is a vast field in which governments can perform prodigious feats. If in most parts of the world they have not done much, it is due partly to incomplete realization by both experts and laymen of the basic necessity, partly to inability to appropriate the necessary funds.

The water necessary to man derives from watersheds or catchment areas, and hence logically arises the concept of watershed management, an extension of sound land-use planning. The deliberate planning of land use, whatever the objectives in mind, is a necessity in modern times. It is essential to the development of the great river basins or vast natural regions.

But when it comes to the practical implementation of such planning, it is important to be able to deal with areas which are sufficiently homogeneous in their physical, economic and social characteristics to provide a suitable basis for a management program. The watershed, be it large or small, provides such a unit.

The management methods employed over it will in part be the sum of the individual skills exercised by farmer, forester and agricultural engineer in their everyday tasks of soil conservation and of regularizing streamflow. Each, however, will have a natural tendency to think that his method is the best and provides the solution to all problems. But the two basic resources, land and water, must be used in the most efficient manner compatible with sustained production. Therefore, a careful co-ordination of techniques and a close collaboration of technicians is necessary, not to mention a sensible division of labor. The watershed provides just the framework for such co-ordination, collaboration and division of labor.

To encourage this trend FAO organized a regional training center on watershed management in India in 1957 and then, a two months' seminar and study tour in the United States of America in the summer of 1959.

Hundreds of examples of watershed management problems were observed and discussed during the tour, and there was general recognition of the following points:

1. increasing acceptance of the feasibility of managing watersheds, and of the technical possibilities for improving the quantity and quality of water, and for controlling floods through combined programs of land treatment and engineering structures;
2. growing awareness of the physical unity of a watershed and of the area served by its water: water development is no longer considered as an isolated technical operation but, on the contrary, erosion control, reforestation, channel improvement, reservoir construction, and even ground water development are being considered as parts of an over-all water and watershed management activity;
3. relative lack of technical knowledge relating to watersheds: in spite of very large research programs, there is as yet no clear and conclusive evidence on many strategic issues, and for this reason there is a decided need for a further expansion of research;
4. unhappy status of economic evaluation of watershed development proposals: there is still a substantial debate as to the methodology which should be used in guiding decisions on watershed development expenditures;
5. human problems involved in watershed management, and the efforts needed to enlist the support and active participation of land users.

The lessons from this tour were studied by the last FAO Conference and, as a result, it was decided that the Organization should give more prominence to problems of watershed management in some of its publications. The contents of this number of *Unasylva* have been planned with this mind, and some later issues will also contain special feature articles on the same theme.

FIGURE 1. – *Forestry combined with grazing on a New Mexico watershed maintained in excellent condition. Prior to 1900 this area was grazed almost exclusively by sheep, then by sheep and cattle until 1925, then gradually the sheep were excluded. Now the area is grazed by cattle for only four months, June to September, and a range rider is employed to get good distribution of grazing. The aspen stand is managed to aid control of water run-off.*

FIGURE 2. – *Driving a soil tube to obtain a soil moisture sample from beneath the surface within the aspen stand. Moisture content will be found by weighing and drying the sample.*

Courtesy, United States Forest Service

The Forest in Land Planning and Land Use

FAO Staff

One of the main concerns of the Working Party on Afforestation and Reforestation of FAO's European Forestry Commission has been to formulate convincing reasons for the general application of policies of forest extension and restoration. Assisted by the Rapporteur, J. A. de Vaissière of France, the FAO Secretariat has compiled a treatise on the subject, spurred in part by FAO's Mediterranean Development Project. At various stages of preparation of the study, parts have been submitted for consideration by the Working Party. The last session, held in Turkey in 1959, decided that the introduction to the study should be published as a "manifesto" in Unasylva. *It is here reproduced as translated from the French original.*

Man first worked the primeval forest by picking the fruits and gathering the foliage and wood to satisfy both his needs and also those of his herds and flocks.

With the advent and expansion of settled agriculture the forest has become an extension of farming, providing grazing for livestock, litter and forage, and raw materials for building and fuel, within the framework of the subsistence economy which prevails wherever inadequate transport facilities and road systems prevent large-scale trading. Peasants' woodlots and communal forests continue to be a necessity in farming. Wood, a heavy and cumbersome material, is used on the spot by the farmer himself or by local craftsmen. In Europe, the "all-purpose" chestnut grove is a typical example of such a situation.

In peacetime, the increase in population, most of which stays on the land, often leads to clearing of forest without always due assessment of the consequences. By taking and using land which he clears and cultivates without paying attention to soil and water conservation, man sometimes brings about his own downfall. The decline of many communities and the return to a pastoral economy more often than not have been the result of misuse of the land which, especially in regions where soil and climatic conditions allow only marginal farming, has not been compensated by soil reclamation or conservation work.

With the beginning of the industrial era, the forest became even more important as a source of fuel, and at the same time supplied large quantities of saw timber, building timber and wood for industrial purposes. Ironworks, glass and salt-works were set up not only near the source of their raw materials but also close to forests, the source of power, while the expansion of mining, railways, etc., required increasing quantities of timber for industrial purposes.

Thus, over the countries and at different times in history, depending on the country and on economic and social conditions, there has been a tendency towards the establishment of relationships, on the one hand between forestry, agriculture and stock raising, and on the other between forestry and industry.

Then, in certain regions and particularly in Europe towards the end of the 19th century, the expansion of communications, the technical progress achieved in farming and the invention of wood substitutes brought about a change in these well-established relationships. Thus, as a result of a broadened market economy due to increased transport facilities and roads, farms have become less dependent upon forests for fuel, building materials and stockfeed; certain hilly or mountain regions suitable mainly for farming and grazing or forests and pastures have been abandoned by their inhabitants who have settled on the plains, where the benefits of technological progress are enjoyed and better living conditions can be obtained with less strenuous work; timber, which was losing its traditional markets due to the competition of new sources of power or wood substitutes, has become the staple raw material for industries that require very substantial initial investments, and that, in return, must be assured of regular supplies in order to guarantee full-time employment to a skilled labor force and prompt and punctual repayments on capital.

In view of this train of events, which has occurred mainly in Europe and in North America, but which will certainly be repeated elsewhere, the role of the forest in sound land use and the direction to be given to forest production, will have to be reappraised. As forest policies are always drawn up on a long-term basis, solutions will have to be sought without delay even if they are not required in the immediate future. However, the problem will become even more acute in certain natural regions where the inadaptability of local economic systems might cause very serious social and economic disparities within a nation.

Land Planning and Sound Land Use

The question as to what is to be done with forests has to be dealt with first on the national level, within the framework of land planning for each country, under which its territory would be used for the following purposes:

1. animal or plant production, including forest production;

2. land development for human settlement (housing projects) and industrial zoning (for factories, roads, etc.);
3. reserves (national parks, suburban forest).

Land planning lays down the principles of urbanization (town and city planning); provision of the basic infrastructures (in particular, the main traffic and transport arteries, power generation and transmission); the establishment of development centers (industrial zones); the development of rural lands (in agriculture, forestry and stock raising); and recreation (green belts, tourism). Such planning aims at ensuring the best use of the factors of production, avoiding as far as possible competition among several branches of activity in one economic sector, or conflicts among different sectors.

Thus, the growth of towns, one of the outstanding features of changing modern economic life, tends to compete with agriculture in two ways: by taking up the land (ever larger areas being used for urban development) and by absorbing man-power (rural exodus). In order to develop the land allotted to them, farmers and foresters are obliged to take the requirements of over-all land planning into account. They cannot ignore the town and country planners' point of view, just as these planners cannot disregard the need for maintaining green belts or even market garden areas near the large inhabited centers.

Land planning can, and in fact must, include planning for certain large natural regions: regional development within one country or several adjacent countries. The management of the catchment area of a large river is an example of such regional development. In a certain number of cases, studies may be confined to regional development projects.

Therefore, while foresters and farmers have to participate in land planning, their role will be even more direct and pressing in ensuring sound land use, that is, in the most appropriate use of the land allocated for farming, forestry and stock raising. Sound land use is that which combines ways of utilizing the land (farming, forestry, stock raising) in order to make the best use of the factors of production (soil, labor and capital), taking into consideration the conditions already existing or to be created, to attain a given or several objectives. These objectives are set in relation to the values attributed to soil and water conservation, to consumption levels and to the standard of living within the framework of an over-all, accepted national policy. Therefore, political decisions lie behind land use.

Farming, forestry and stock raising, each considered as a whole, are all land uses that can lay claim to various roles: physical (soil and water protection and conservation), productive (foodstuffs or raw materials), and social (employment and improvement of standard of living in general). All contribute to the desired ultimate aim.

As regards forestry, its triple role corresponding to the above three criteria has been the subject of many studies. It is the recognition of these three functions that makes it possible to set the objectives to be attained in forestry. On the other hand, the measures to be taken to facilitate the use of other factors of production and attain the objectives defined, must take into account the technological, economic and institutional conditions which indicate possibilities and limits. The technical conditions concern the state of the soil, the level of technology in each country and the vocational training and receptiveness of the people to extension teaching; economic conditions refer to market organization, financial and economic structure, the basic infrastructure and investment prospects; while institutional background is the result of legislation, customary law and usufruct rights.

The special nature of the factors of production with regard to forestry should be mentioned here.

In general, in farming areas the more or less marginal land is left for forests. High-yielding forests have always been, and will only be, established through careful and constant tending that any error in management practice may jeopardize. Greater efforts on the part of man to better his environment and make the fullest use of technical achievements will enable him to obtain more valuable stands than those resulting from the mere interplay of natural forces; intervention of this kind, however, usually is justified only on the best lands.

As investments in forests do not give any returns for a very long time, and as the capital tied up is very considerable, forestry work in most cases entails raising long-term, low interest public loans. Further, the hauling of forest products to mills also requires a substantial outlay to which public funds must contribute. With regard to processing plants, as increased mechanization and full utilization of technical improvements make it necessary to expand premises, so these plants need more capital. Laying in of stock and seasonal trends especially in the northern countries, also necessitate substantial working capital. The need for such capital is even greater when export trade is carried on and recourse must be had to credit.

Lastly, although there seems to be a trend towards providing full-time employment for skilled forest workers who are paid practically the same wages as those in industry, many workers are still recruited from among farmers who generally have little technical training in forestry.

Both land planning and sound land use, depending on the priority given to one of these three roles without, however, excluding the other two, are realized on the local level by:

1. watershed management which, taking as a work unit a sufficiently uniform natural region formed by the catchment area of a river or one of its tributaries, aims at obtaining the best soil and water conservation and utilization (physical role dominant);
2. land use management which, within each administrative district, aims at establishing economically profitable farm or forest management units (productive role dominant);

3. community development, mainly with a view to raising the standard of living and consumption levels of communities (social role dominant), while making them participate in the economic expansion of the nation.

Relation of Forestry to Farming and to Industry

The interrelationship between land planning and sound land use, as well as their application on the national, regional and local levels, have been reviewed above and now the relationship between the various factors that contribute to economic and social development should be examined. Pending the time when the application of " input-output " methods will make such correlation clearer, the following paragraphs outline, in particular for Europe and the Near East, the possible relationships, on the one hand, between forestry, agriculture and stock raising, and on the other, forestry and industry.

Forestry and agriculture

In flat areas or plains suited mainly to crop growing, there are no major obstacles to mixed forestry and farming. Stands of trees, such as poplars, grown in association with farm crops as well as windbreaks, shelterbelts and farm woodlots, all clearly show the benefits that farmers derive from the protective role of trees and the high profits earned from quick-growing species encouraged by cultural care and grown on soils to which fertilizers, soil improvers and even irrigation are applied. In regions where the problem of soil conservation does not arise, and where there are no transport difficulties, the role of trees depends on what they bring in the way of earnings, and forest production must be integrated with wood-using industries set up often close to consumption centers. However, stress should be laid on the special character of the main shelterbelts, which should be kept on a permanent basis, either by means of special laws or by attaching them to state property.

On the other hand, in poor regions where farmers, often still practicing a type of shifting cultivation, encroach on forests, whether it be in mountain areas, in arid or semiarid zones, the association between forestry and farming raises far more serious difficulties. Only mountain and steppe areas are discussed here.

In mountain areas, where land once used to grow mixed food crops is being abandoned by rural populations as a result of the growth of a market economy, or in regions of extensive uncontrolled grazing where man and his herds continue to live at the expense of dwindling forests, there is a risk that the development of ties between forestry and farming or extensive grazing will produce veritable human deserts as a result of total abandonment of mountain areas, or cause such severe soil depletion that their reclamation would entail investments out of all proportion to available means, at least under present circumstances.

The reorganization of rural life in mountain areas should be carried out parallel to the development of the nearby plains but under a much more extensive management system. As the surplus population of the mountain areas settles on the plains being developed, the mountain areas will change over from a subsistence economy to a market economy by modifying their three basic activities thus: stock raising will be practiced on the land best suited to animal production; forestry on the other land to supply timber for industrial purposes, in particular to the pulp and paper industry, and possibly to serve as supplementary pastures (stands not furnishing industrial wood but foliage and fruits as fodder for stock); tourism to satisfy the needs of city dwellers who increase in number as the market economy develops. These activities will link the plains to the mountains which will provide the former with summer pasture for livestock, raw materials for their industries and recreation for their inhabitants.

Naturally, depending on conditions and particularly when mountain areas are large or difficult of access, land management practices will have to be applied on the lines indicated above but making provision for greater economic selfsufficiency: mixed food cropping on the best land (even possibly in firebreak zones), building up light industries and handicraft occupations grouped near forest villages, etc. Such mountain land management should, however, be planned in such a way as to support or settle only the workers needed for the tending and working of the forest stands, caring for livestock and the upkeep of dams either for power generation or irrigation. If the mountain areas continued to be overpopulated, " subsidizing " by other more favored national communities would be necessary in order to obtain a reasonable standard of living, either by protecting the prices of its products, or carrying out a policy of public works, particularly for infrastructure.

At all events, whatever the degree of selfsufficiency allowed for mountain areas, their management will always have to be such as to protect the plains from erosion, ensure a good water supply and furnish certain products; animal products, such as milk and meat and wood products, the importance of which increases as living conditions improve.

On the foothills, overcrowding and erosion will prevent such reconversion from taking place immediately, especially as regards forests. Here, terracing and contour trenching for crop growing and tree planting are practicable. This solution may be the final one on fairly flat land where machinery can be used and where products can be obtained cheaply enough to compete on the market.

Where the land is more rugged and the latter techniques cannot be used to bring the area into a competitive economic system, the solution proposed has the advantage of checking erosion and providing employment for a large labor force, naturally with the aid of public funds. The way must thus be prepared for the forest which will be established more easily on well-cultivated ground.

With regard to steppe regions, free grazing should develop into stock raising, whether this be organized independently or combined with the stock farming of more favored areas where farming is well-established. In the latter case, the steppe or range land will serve as a livestock breeding area, while irrigated grasslands will provide the rich pasture for livestock fattening.

Pasture improvement, based on rotation, the setting up of sources of water and controlled grazing, should be applied in existing communities and may attain considerable extension in sparsely populated regions. The forests, or rather the trees, can have their place in this management provided that the forest ranger services are efficient. The trees will produce timber for the people, protect the grass cover and also supply loppings as supplementary fodder and shelter for livestock.

Forestry and industry

As they cease to be the sole source of fuel and raw materials for building purposes, forests must undergo profound changes. They must now produce either top-grade timber, the high selling price of which will compensate for the care and time involved, or else timber meeting certain rather broad specifications, but the main characteristics of which must be polyvalency, abundance, uniform quality and easy accessibility.

These latter timbers can be produced either on large tracts of land where there is no competition with farming or stock raising, that are readily accessible, or else on areas close to farms, or even on farms themselves where, with special techniques, quick-growing species can be grown on very small plots.

Such reconversion of the forest requires increasingly intensive sylviculture, that is, ever more frequent intervention by man, and generally entails substantial investment: afforestation of land abandoned by farmers, replacement of wild trees by valuable species, especially softwoods, plantations outside the forest, building and maintenance of access roads and timber extraction facilities, protection of stands against their natural enemies: fire, insect pests and diseases, dangers all the more pressing in that intensive sylviculture often results in the natural forest being replaced by more uniform, even-aged and therefore more vulnerable stands.

Hardwood forests must be progressively adapted to the demands of a market which takes only a few species with well-defined technological specifications. Technical improvements will perhaps make it possible to utilize, especially in the pulp industry, different kinds of wood together, but foresters will endeavor systematically to promote the growing of better species, if necessary by establishing plantations on sites chosen with a view to available transport facilities.

The practice of intensive sylviculture may lead to a veritable tree cultivation by methods similar to those used in farming, making it possible to increase production by the selection not only of species but also of individual trees, and to maintain soil fertility despite the constant drain on it, by modifying contours, tilling the soil and applying fertilizers.

At the other extreme, on the most severely degraded soils, the restocking of a stand to make it economically profitable may require such large investments that it would be preferable to leave the natural vegetation despite the fact that little or no return can be obtained from it, if this tree or shrub cover is sufficient to check erosion.

Thus, at the two extremities of the chain, there would theoretically be the commercial forest yielding high profits, and the protection forest of purely physical value, conserved without thought of obtaining any financial return, but highly important owing to the indirect benefits it provides by ensuring soil and water conservation.

Forest Expansion and Rehabilitation Plans

The place of the forest and woodland in land planning and sound land use, as well as its relationship to various economic sectors have been described above, and we can now examine forest enlargement and restoration plans with reference to the reorganization of forestry.

As already pointed out, the aims of these plans are set in relation to the physical, productive and social roles of the forest, and the general policy followed may stress one role over another, or even assign a clear priority to one of them.

The implementation of such plans, taking into account the present technological, economic and institutional conditions, or those to be created, will necessitate certain technical and administrative measures, as well as laws or regulations, as has become evident in countries that have already carried out large-scale afforestation programs. Publicity, educational programs and the approval of the population will also be needed.

Included in the technical measures to be developed, those concerning the organization of forestry research and the broadcasting of results obtained at all levels are among the most important. The programs of forestry research institutes should be drawn up and granted adequate personnel and material for periods of several years, with a view to the economic and social aims adopted. For economic reasons they should be coordinated at an international level and have bearing also on the utilization of forest products as well as forestry, on the science of forestry as such (timber increase, reforestation techniques etc.), on the application of natural history and biology in forestry (pedology, forestry genetics, etc.) or even economics and social science.

In fact, publicity and educational programs are essential for the implementation of afforestation projects. Not only the public but also the nonforestry administrative services must be fully convinced of the need for and value of the work undertaken and the results to be expected.

Forest extension and restoration plans differ from other development plans by reason of their long-term

nature and the time required for the work to yield any return. The mobilization of the means needed for implementing the plans generally takes far more time than is compatible with the normal duration of economic and social development plans, whether at the national or the regional level. Those special characteristics, moreover, justify resorting to independent sources of financing.

However, with these reservations, forest extension and rehabilitation plans should not be considered independently of plans for reorganizing agriculture, particularly in respect of sound land use, and conversely, agricultural improvement should be planned with possible forestry developments in mind.

Forestry expansion by no means implies contraction of agricultural production and can often have precisely the opposite effect. Indeed in many cases no agricultural improvement is possible without previous forestry development.

Since, on the other hand, such forestry plans must be linked up with industrialization schemes, the development of communications, power transmission and distribution, etc., they will form segments of programs which will provide the data for successive, shorter-term, economic and social development plans, within each country and natural region.

In short, a national forest extension and rehabilitation plan constitutes a detailed, segmented pattern, the aim of which is to provide the best solutions for obtaining the most suitable expansion of forestry. However, it is necessary to check on the consistency of forestry plans in relation to other land use projects on the one hand, and to economic and social development schemes on the other, at least as regards the section of the program concerned.

The forestry plan itself may be part of successive, shorter-term programs, or of regional programs covering natural regions. In the latter case, the relative importance assigned to each role of the forest may differ from that accepted on the national level for fixing the objectives. This change in the choice of main decisive criteria may lead either to a diversification of financing sources, or to a modification in the order of priority for implementing projects at the general level, or a change in mode of operation locally: watershed management, land planning or local community development.

In conclusion, whether it be a question of land planing or sound land use, existing or potential composition must be replaced at all levels, national, regional and local, by an orderly co-existence between the various sectors of economy or between the segments of a single sector, the assumption being that political authorities will define and recognize specific objectives, due consideration being given to the claims of soil and water conservation, that responsible administrative bodies will work out and co-ordinate the measures for attaining these objectives, and that a well-prepared public will accept such measures.

MORE FUELWOOD FOR COOKING AND HEATING

Fuelwood is an appallingly scarce commodity in parts of many countries of Asia, the Near East, Africa and Latin America. It need not be so rare or so relatively expensive, if vigorous programs are put into effect. This will be one of the aims of the FAO Freedom from Hunger Campaign.

Watershed Management in the World Picture

Herbert C. Storey
Director of Watershed Management Research, Forest Service,
United States Department of Agriculture, Washington

It is only during the past ten years that the term "watershed management" has become much used throughout the world, although concern about some aspects of watershed management dates back at least one hundred years.

During those early years, activities were aimed at control of torrents in steep unstable mountain areas, the control of floods through the construction of dams, levies, and similar structures, and in reforestation for the purpose of regulating streamflow, ameliorating the climate, and reducing erosion.

About the end of the nineteenth century, interest increased considerably, particularly in the form of arguments as to the magnitude and character of the effect of forests on water yields, floods, local and regional climate. At this time, in Western Europe, several international meetings were held to discuss the state of knowledge pertaining to the influence of forests on their environment, the need for more reliable information in this regard, and improved methods and instrumentation to obtain such information.

Since the second world war, watershed management has become a subject of great international interest. An examination of recent world literature reveals much material on watershed management problems, research programs and results, and action programs in many parts of the world.

There are a number of reasons for this widespread and rapid increase in concern about watershed problems and interest in methods of meeting them. Concern over repeated destructive floods, their attendant loss of life and property has brought about numerous programs intended to prevent or reduce flood damages. Excessive siltation of streams with consequent impairment of navigation, deterioration of fish habitat, reduction of water quality, and aggradation of river channels and water logging of fertile valley bottoms have all resulted in a widespread interest in measures to correct these situations and prevent their occurrence in the future. Great concern has developed over accelerated erosion in practically all regions of the earth with the serious loss of soil and consequent loss of productive capacity while production needs are increasing rapidly. Although, in the past, problems associated with water shortages may not have been given as much attention as that extended to the more striking destructive elements, there is a rapidly growing concern over the alarming increase in water shortages with their present and potential impacts on industrial and agricultural economies as well as the serious hazards to domestic supplies for human consumption. All of these concerns and interests are closely associated with skyrocketing populations and increasing efforts to improve the well-being of present and future generations.

Water problems of varying types and intensities are nearly worldwide in the populated parts of the earth but are generally most crucial where pressures on the land are greatest. In areas of dense human populations, there has developed a tremendous pressure for water, food, fuel, fibre and living space. These elements are necessary to some degree in order to sustain life, and must be available in much larger quantities if more than a bare existence standard of living is maintained. The result is that land is exploited in an effort to supply all needs and degradation begins — vegetation is depleted, soil is eroded and productivity reduced, stable streamflow is changed to sequences of floods alternated with little or no flow. Degradation is a vicious cycle and self-perpetuating. As land becomes unproductive and useless, pressure on that remaining is increased and degradation is hastened. If this process is not stopped and reversed, a once fertile and productive landscape eventually becomes virtually a biological desert.

What is watershed management?

Watershed management, though a widely used term, may mean different things to different people. In this discussion, watershed is used synonymously for catchment and is considered as all that surface area drained by a specific stream, large or small, or draining into a lake. Watershed management is the carrying out of planned practices and operations to attain desired objectives in terms of the functioning of the watershed. The two key words of this definition are *planned* and *objectives*. Watershed management does not just happen, things are done or deliberately not done for a specific purpose.

The objectives are generally determined on the basis of the present and future economic and social requirements of the population of a large basin, of a region or even of the nation as a whole. But planning of practices and operations in order to reach these objectives efficiently and effectively can be applied only to rela-

tively homogeneous physical, economic and social units, that is to say in the framework of a watershed, the determination of which is, in fact, the first phase of watershed management.

Some people think of watershed management as solely a protective process. " Good timber management is good watershed management " is a commonly used expression. This is not necessarily correct. Good timber management is usually aimed at attaining the maximum sustained yield of desired commercially valuable timber crops. This says nothing about watershed objectives, nor desired characteristics of water yield. It is true that operations intended to attain continued high yields of timber must include practices that will protect the growing sites, prevent erosion of soil, and consequent reduction of productive capacity. Prevention of erosion is also desirable from the watershed standpoint but this general line of reasoning implies that watershed management is a passive thing whereas its very name shows that it is a positive action. Management means the " judicious use of means to accomplish an end " and thus requires both plans and objectives.

Watershed management may have one of three broad objectives, or in some areas combinations of modified forms of these three. The first objective is rehabilitation. This consists of practices intended to repair watersheds that have deteriorated because of past misuse or unwise use, accidental or intentional, such as repeated fire, overgrazing, repeated overcutting of timber, improper tillage practices, and use of land for purposes to which it is not suited.

This objective of watershed management has received much earlier and more widespread consideration than either of the other two. Centuries of destructive use have resulted in deterioration of vast areas of the earth, with resultant serious effects on water yields, increase in frequency and severity of floods, and loss of productive capacity of the land. A large proportion of this land is located in semiarid climates where conditions are such that rehabilitation is extremely difficult and costly. The need for more land to meet the needs of increasing populations requires the rehabilitation and rebuilding of these damaged areas. This is of prime importance in much of the land around the Mediterranean and through the Middle East. The future well-being of the people of this region and the establishment and maintenance of stable economies will hinge to a major degree upon the rehabilitation of these ravaged lands.

One of the first steps in a rehabilitation program is to remove or discontinue the cause of damage if this has not already been done. If repeated fires are a major cause, an adequate program of fire prevention and control is indicated. If overgrazing is the culprit, grazing should be materially reduced and carefully managed or discontinued until such time that the area is again able to provide this use. If unwise use has caused damage, a change in use should be made. For example, an area currently devoted to agricultural crop production might be converted to grass or timber production.

The next step is to re-establish an adequate protective covering of vegetation by seeding of grasses or tree planting (Figure 1). This must be supplemented in many cases by structural measures such as gulley-plugs, small dams, contour terraces and furrows, grassed drainage ways, water spreaders, and similar devices.

The second objective of watershed management is protection. This consists of practices aimed at maintaining good watershed conditions that already exist while carrying on other uses of the land, such as for timber growing and harvesting, grazing of domestic livestock and big game, recreation, or crop production. This objective is extremely important although it has not had as long or widespread attention as rehabilitation. Protection of watershed land that is already in good condition is vital because it maintains productive capacity at a time when needs are growing at a rapidly increasing rate; secondly, it prevents the development of destructive processes; and third, it is much less costly than rehabilitation of land following serious depletion (Figure 2). We need to maintain the productive capacity of our soils, forests, and watersheds if the needs of present and future generations are to be met.

The need for this objective of watershed management is illustrated by conditions in the northwestern United States. In this area harvesting of virgin timber stands is rapidly pushing back into formerly inaccessible regions in the higher parts of the Cascade mountains. These areas constitute the head waters of important rivers. It is imperative that timber harvesting operations be carried on in such a manner that growing sites are protected, and soil and water values are not impaired. In some cases, this may require the development of entirely new concepts and methods of timber harvesting and removal. In certain instances, timber harvesting

FIGURE 1. – *Rehabilitation of this formerly gullied area has been brought about by reforestation and gulley-control structures. A wasteland is now producing again and will soon have harvestable timber products.*

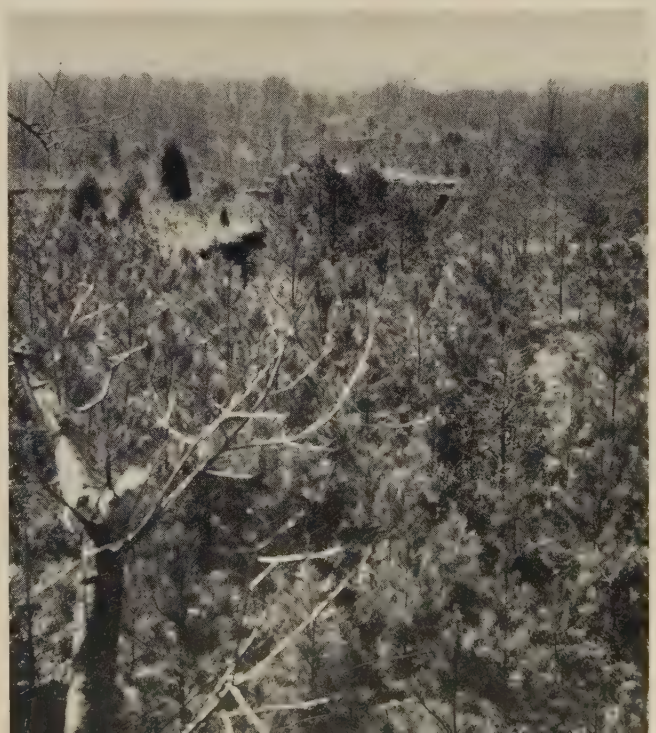

FIGURE 2. – *This was once a logging road, but poor location, inadequate drainage, and a heavy rain resulted in this boulder-strewn channel. Another road will be needed for removal of additional timber cut and large quantities of sand, silt, and gravel have been deposited in streams below.*

FIGURE 3. – *A logging road properly located with adequate drainage and gentle grades will cause little increased sedimentation of streams.*

will be deferred until such time that techniques are available that will insure full protection of the soil and water.

Protection of soil and water values of maintenance of presently good watershed conditions requires all uses of the land to be so planned and carried out as to insure a minimum of soil disturbance or alteration of existing hydrologic conditions. Logging roads should be located and constructed so as to avoid unstable soils, prevent concentration of storm run-off and discharge of erodible material with grades maintained at a minimum, and no encroachment upon stream channels (Figure 3). System, timing, and intensity of grazing use should be designed to avoid excessive soil compaction and to maintain a good protective covering of vegetation. The particular method used will depend upon the characteristics of the land involved and will vary with soil types, topography, climate, vegetation, and availability of water. Adequate protection from wildfire is a primary need, as uncontrolled destruction of vegetation by fire is fundamentally incompatible with the basic concept of management.

The third and final objective of watershed management is the improvement of water yields. This includes practices aimed at either increasing total water yields or changing timing of yields better to suit man's needs. This objective has received, in general, less attention through the years than either rehabilitation or protection. This is recognizable because rehabilitation and protection represent the bare minimum necessary if we are just to survive even without materially improving worldwide standards of living. Improvement of water yields on a major scale represents a look into the future and probably may be considered as the ultimate in watershed management, because here we are improving on nature. Through our efforts we will tailor the functioning of a watershed to best meet our needs, of course, within limitations imposed by things over which we have no control.

The developing importance associated with this aspect of watershed management may be illustrated by situations in the United States, United Kingdom, and South Africa. In the western United States, a rapidly growing concern as to the adequacy of water supplies for increasing domestic, industrial, and agricultural needs is resulting in a demand for management of watersheds so as to increase water yields or extend the period of yield further into the dry summer months of the year. Intensive studies are under way to determine whether water yields may be materially influenced by changes of vegetation, the magnitude of such changes and what are the conditions under which practices may be successful. In addition, studies above timberline are aimed at determining methods of accumulating snow at greater depths in selected locations and retarding the melt rate so that water will be available to extend streamflow into the summer months when needs are highest.

In the United Kingdom, much question is being raised as to the effect of reforestation on water yields. Some measurements indicate that water yields may be reduced when grass-covered watersheds are reforested. Proposals have been made that reforestation be ceased

in certain areas or allowed to continue if the income from forest products is used in part to finance the development of additional water supplies to replace the quantities used by the forest.

In the Union of South Africa, the problem developed as a result of the establishment of artificial forests where there were none before. Since the end of the 19th century extensive "man-made forests" have been developed by the plantations of exotic timber trees in areas which had for many years, if not always, been covered with grass or shrubs. After considerable study it was recommended that extensive afforestation should not be undertaken without careful thought being given to the possible consequences to water yields. It was even established as a forestry department policy in 1932 that where discharge of streams is used for irrigation, industrial or municipal purposes, moist areas along streams would not be planted.

The general subject of increasing water yields or materially changing the timing of yield presents many unknown relations and will require much intensive research to unravel the complex processes involved and explain some of the apparently contradictory results of various studies. In general, results of research to date indicate that water yields may be increased to a varying degree by reducing the density of woody vegetation, although extreme removal of vegetation may result in increased evaporation from the exposed soil surface and no increased water yield. Research has also indicated that conversion from deep-rooted plants to a cover of shallow-rooted species may increase water yields under some circumstances. In an area of deep winter snowpack water yields from an experimental watershed have been increased by special patterns of cutting the coniferous forest (Figure 4). Water yields have also been increased by cutting of woody vegetation along stream channels. These results and others lend strength to the hypothesis that water yields may be increased if evapo-transpiration losses can be reduced.

The three main objectives which have just been described cannot be reached without taking into consideration the needs and the possibilities of the populations concerned and without obtaining their actual co-operation. Even high watersheds to be managed are frequently inhabited, and the welfare of their inhabitants must be fully recognized and provided for. Watershed management must find the necessary compromise between sometimes conflicting but legitimate interests.

International action

A number of international organizations are carrying on various activities that assist in the advancement of watershed management. Some of these organizations are made up of scientists from a number of different countries. In some cases, they are made up largely of ordinary citizens who are interested in conservation, and in others they are created through the joint action of national governments. The contributions of these different organizations vary widely in importance and value and include general educational activities, development and dissemination of technical knowledge, and efforts toward policy development. Collectively they assist materially in advancing watershed management.

The International Association of Scientific Hydrology recently held a meeting in Germany and devoted an entire symposium to the subject of the effect of water on woodlands. This provided a valuable exchange of information between scientists of different countries on a

FIGURE 4. – *Annual water yields from this 290-hectare (714-acre) watershed were increased an average of 25 percent during the first two years following removal of about 50 percent of the coniferous timber in a pattern of clear-cut strips.*

subject of prime importance to watershed management.

The International Union for Conservation of Nature and Natural Resources devoted a major portion of its last annual meeting to discussions of soil and water conservation problems and programs. This organization has been giving more and more consideration to the conservative use of natural resources as contrasted with its former concern solely for straight protection.

The International Union of Forest Research Organizations has a special section on forest influences and includes this subject as an important topic for discussions in their regular meetings. A knowledge of forest influences constitutes an important basis for development of watershed management practices.

The World Meteorological Organization has assisted in the standardization of presentation of meteorological information, has helped disseminate information about techniques and equipment, and will now expand its activities to provide similar services in the field of hydrology. Both of these activities are highly important to watershed management.

The Food and Agriculture Organization has been quite active in promoting a better knowledge of watershed problems, techniques for meeting these problems, and providing assistance in planning necessary action programs. FAO sponsored jointly with the Government of India a watershed management development center for Asia and the Far East, where representatives from nine different countries in that part of the world received training in the principles of watershed management and methods of developing and carrying out watershed programs. A similar development center is being planned for the Near East area. FAO has also sponsored the organization of various working parties and subcommittees to consider various phases of watershed management; these include a working party on watershed management of the Asia-Pacific Forestry Commission, a working party on avalanche and torrent control of the European Forestry Commission, and a subcommittee on soil and water conservation of the European Committee on Agriculture. FAO also organized jointly with the Government of the United States an eight-week seminar and study tour on watershed management that was held during the summer of 1959. FAO has also provided assignments of technical personnel to assist various governments in delineating their watershed management problems and preparing plans for programs to meet these problems.

The Fifth World Forestry Congress, to be held in the autumn of 1960 in the United States, will have a separate section of the program on forest and range watersheds. Three half-day sessions will be devoted to this general subject.

Although progress in watershed management has been increasing rapidly during recent years, the rate of increase must be still further quickened if needs are to be met adequately and expeditiously. There are a number of things that international agencies as well as national governments might do to step up the level of accomplishment. International agencies could materially increase their efforts towards obtaining a better exchange of knowledge between technicians of different countries. Technicians in some countries are hampered by the lack of access to literature of other countries. Where the need exists such agencies might assist countries in developing good technical libraries on the subject of watershed management and the disciplines providing the scientific basis for such management. International agencies might also assist in the interchange of translations of technical material and possibly in the development of multilingual glossaries of terms used in watershed management.

International agencies might also work with countries concerned in delineating problems involved and in development of action plans for watersheds of streams that cross international borders.

National governments can do a number of things to increase the rate of accomplishment in the field of watershed management. One of the primary steps needed is to educate the general public as to watershed problems and actions needed to meet these problems. A very urgent need is a considerable increase in the training of technical personnel in watershed management as this is basic to success in this field. Research programs in various aspects of watershed management should be materially increased. Governments should work towards improving opportunities for exchange of information between their watershed management personnel and those of other countries. Watershed management plans should be developed for programs that are sound technically, economically, and socially. Then the final and the most important thing is to provide the necessary financing for carrying out the needed programs and to carry the programs through to fulfilment. This is most important as plans, even good ones, accomplish little if not put into practice.

Thus, through concerted action, using all available resources of national governments and international organizations it may be possible to meet the challenge and opportunity encompassed in watershed management throughout the world — one of the most important elements towards building a better and more stable life for this and future generations.

Economics and the Use of Land for Forestry[1]

J. J. MacGregor
Department of Forestry, University of Oxford, United Kingdom

It is a surprising thing to find that, in spite of the important changes which have taken place in the subject of applied economics since the 1930's, the application of the modern tools of economic analysis to problems of forestry has been somewhat neglected. There has been a common belief that forestry is somewhat different from all other branches of economic activity and, therefore, it demanded economic methods of its own. Consequently, "forestry economics" as it has been termed, has come to be bound up very largely with what seem to be complicated formulae involving interest calculations and it is very seldom that what could be termed an orthodox economic approach — such as one would find in studies of agriculture, the coal industry, or the textile industry — is found.

This article has for purpose:

1. To survey the economic factors which determine the level of productivity of land when used for forestry — and in particular to consider any economic determinants which seem to be peculiar to this form of economic activity. These economic influences will be discussed with reference to the orthodox, generally-used, tools of economics.
2. To illustrate, very briefly, the use of economics in the formulation of policies regarding the use of land for forestry. Reference, in this section, will be made to existing topics relating to the use of land for forestry.

Economic factors determining the level of productivity of land under forestry

The physical factors influencing productivity are fairly obvious — soils, topography and climate — and it would be reasonable to expect that the productivity influences in forestry are similar to those of agriculture but the long-term production period obscures the effect of seasonal influences. Trees tap different layers or strata and to this extent it may often happen that submarginal land for agriculture may be supra-marginal for forestry and *vice versa*. There can be no doubt, however, that fertility of the forest soil has an enormous effect in the return from the forestry investment.

Physical factors therefore have a direct bearing on productivity, and studies have shown the close relationship between "fertility" and volume produced, and the volume per unit of *time* — a subject which will be considered further.

But when considering productivity in this context reference is being made to an economic concept — and the standard of measurement must be value produced. If attention is being given to the productivity of *land* — an attempt is being made to isolate that proportion of the total value product which is attributable to land — rather than to labor and capital. This isolation of the contribution of a single factor of production cannot be done with complete accuracy — but one way of arriving at an estimate is by using:

(*a*) an estimate of the gross value of timber produced;

(*b*) and then by exhausting the gross value product (G.V.P.) of all payments to the factor of production employed *other than* to land — which gives a residual of the price which could be paid for the land.

But this residual can also be considered in another way. The gross value produced within an enterprise is the same as the sum of the contributions of the separate factors of production employed — since the G.V.P. and the total costs are the two sides of one equation. If the assumption that the amounts paid to labor and capital are true reflections of their marginal product can be accepted — then it follows that the residual is a true measure of the land's contribution to the total product. Therefore, the aim is to calculate this residual — the net return to land.

One of the most distinguishing features of forestry is the length of time for the productive process depending, of course, on the soil quality and climate and success in selection of species. For the economist, the importance of this waiting period lies in the role of interest on capital — as an agent of allocation or as a guide to the alternative uses of capital open to the investor, whether he is the Government or a private individual. In forestry — interest on capital accrues at a compound rate and, therefore, assumes great proportions in the structure of costs. This holds true whether the forest authority borrows capital from a government Treasury or not — and whether it pays interest or not — for although capital may be free to the authority it is not free to the economy — and it is important that investments are made with reference to the relative yields in alternative uses. This reference to alternative uses is, in fact, the crux of economics —

[1] A discussion paper prepared for the course on Land Use for Forestry and Agriculture held at the Department of Forestry, University of Oxford, 1959. A note on this course appears later in this issue.

which was defined by Professor Lionel Robbins in his *Essay on the Nature and Significance of Economic Science* as the study of the allocation of scarce resources among competing ends, which have alternative uses. Economists speak of the concept of opportunity costs which states that the "real costs" to society of a given policy (e.g., investment) are measured by the "opportunity costs" of that policy — or the values of product foregone. Returning to time in forestry, therefore, in the calculations of the net product of land — it is necessary to construct a time investment schedule and a time revenue schedule, in which outlays are accumulated at interest from the year of their origin to the end of the production period, and so with revenues — which "earn" interest.

What, then, are the chief determinants of productivity of land under forestry? They are the ruling rate of interest and the length of the production period; the level of costs — and especially the level of initial costs of creation; the size of forest unit — and the importance of economies of scale; the volume — and speed of production; and the price of timber — with the price of the immature timber an important factor in total revenues. The question of price raises very complex issues, for it is, itself, subject to many influences — the most important of which are transport costs, related to location of the forest; the national income of the buying country; the trends in the key timber-demanding industries; the elasticity of substitution between timber and other products, the relation between the supply price of domestic timber and foreign timber; and the relative monopoly power of the forester and timber user. The question of the determination of the price of timber is extremely complex, for the demand for timber is a derived demand and consequently we are taken into the field of the level of demand for the products made, in whole or in part, from timber.

Interest accounts for a very high proportion of the total costs of forestry, especially when the creation of a new forest unit is being considered. A rise in the rate of interest of as little as 1 percent affects the costs of forestry very markedly indeed. In the north of Scotland, a rise from 4 percent to 5 percent would increase total costs per 100 acres by 52 percent.[2] The rate of interest considered in making profitability calculations must be the rate actually paid — if the capital is actually borrowed, or the "national" rate of interest or "opportunity cost" rate when the Government makes the investment. Clearly, the degree to which a rate of interest equal to the opportunity cost rate is looked for, will depend on other influences over policy than the purely economic. But, if economic motivation is the key to policy, some idea of the national rate of interest must be calculated. The production period is a very important determinant of land productivity under forestry when interest is accruing at a compound rate. From one country to another there is quite a range of time within which general-purpose timber can be grown with relatively short rotations, say, for a pulp or a pitwood demand. Here technical and economic arguments can be conflicting — if technical experts argue that light thinning is desirable, or that slowly grown timber is desirable — whereas economics may dictate that policy should concentrate on the production of quickly grown timber. Such matters should be settled by the market demands for timber. A difficulty, however, arises when policy is decided, because it is not possible to know what the market will be in 10 to 15 years' time and the elasticity of supply in forestry is low.

The greater the initial establishment costs at interest over the entire production period, the greater will be the cost burden. For policy, therefore, attempts should be made to minimize the initial costs of forestry creation. A constant search goes on for methods which will achieve reduction in cost, and in this connection in the United Kingdom mention can be made of the Work Study Section of the Forestry Commission which aims, among other things, at providing the most efficient way of performing given tasks.

Perhaps, as a further illustration, the question of housing costs — a problem for the United Kingdom Forestry Commission, might be mentioned. Housing costs, if charged to the account of the Commission, would represent a very high proportion of the total costs when interest has been paid.[3] If private costs of a forest enterprise are considered then these costs are indeed costs to be included. If, however, the "social costs" of forestry as carried on by a government authority is considered — and it can be shown that the authority's investment in housing does not constitute a net claim on resources (since the forest workers would have been housed elsewhere), — then such costs must not be charged to the authority's account.

Thus, so important is the inflation of costs in forestry by compound interest, that all possible attempts must be made to secure the maximum product per unit of input of all factors of production, at all stages of the forest cycle. Forest planners and managers should constantly examine the proportions of the different factors of production employed and ask whether costs could be cut (and output maintained) or whether output could be increased, per unit of cost, by a reallocation of the proportion of factors employed. In economic parlance, the factors of production must be employed in such ratios that their marginal products are equal.

The size of the forest unit will also have an important influence upon costs; for example, on fencing costs and on the incidence of overhead or fixed costs. How far it is possible to benefit from a large forest through economies of scale is a subject which requires empirical research. It is almost certainly true that economies are possible through the planning of a smooth, uninterrupted flow of operations and full utilization of labor

[2] Dr. K. R. Walker, unpublished thesis, 1959, page 237.

[3] They amount to 40 percent of the costs per 100 acres if the interest rate is 5 percent. K. R. Walker, *op. cit.*, page 233.

with no idle capacity, all of which might be impossible in a small forest unit.

Just as costs must be minimized, production must be maximized. High volumes, produced in the minimum time, are what must be aimed for, always assuming that this policy is consistent with the market demands for timber. This is more the task of the technical expert than of the economist and, indeed, much work is being done on this important aspect of forestry productivity. The price of timber is a very wide subject and can only be mentioned here as a major determinant of value productivity of forest land. Many of the determinants already mentioned above are outside the control of the forester, but often he could enhance the chances of increasing prices for example by devising more efficient extraction methods and by pursuing standardization policies. But little can be done about such influences as the high transport costs in the United Kingdom compared with those of Sweden and some other countries — where floating is combined with a volume density near to the sawmills, and where the relatively cheap sea transport gives overseas shippers an advantage at our ports — which are never far away from the main center of demand. Where high transport costs are inescapable, however, much thought should be given to the relative merits of long hauls of timber to timber-using industries and the alternative of locating those industries near to the timber-producing areas.

To sum up, therefore, economics focuses attention upon the key variables involved in the productivity of forest land, namely physical productivity, the length of the production period, the rate of interest and, consequently, upon total revenues. On the other side of the equation the key variables are capital requirements and the time required by the production period, the rate of interest and, therefore, total production costs. Questions such as opportunity costs and substitution of factors of production at the margin are seen to be of vital importance.

Use of economics in formulating forest policies

From general economic influences over the level of land productivity under forestry, it is necessary to turn, very briefly, to some actual examples of policy problems encountered. Most countries face the problems of what kinds of timber to produce, what size of forestry estate to aim for, and where to locate the forests. For other countries, forests are already present as natural resources and, although the above questions may be relevant, the main problem here may be how much timber to extract, i.e., what is the optimum level or intensity of cutting?

The chief difficulty in answering the first few of these problems is that it involves economic forecasting. On the one hand, the economist will argue that the kind of timber a country should produce depends on market demands but, on the other hand — in view of the long waiting period between investment and output — market demands may have changed, and the elasticity of supply in forestry is low. The size of a forest estate and its location will depend on such things as the comparative advantage enjoyed by one region over another, and on the opportunity costs involved in deciding on land for forestry rather than for agriculture or other economic activity. Again, however, comparative advantages change and require readjustments of resource allocation and these are likely to be difficult to make where forestry is concerned. With growing reliance on artificial, as opposed to natural mature forests, it is likely that important shifts will take place in the comparative advantages which regions enjoy in timber production. Much of the very valuable virgin forest, long regarded as among the "free gifts of nature" is being worked out or becoming more remote and inaccessible. Forestry, like agriculture, has its intensive as well as its extensive margin — the intensive work being applied to the older second growth, or the artificially managed forests near to the centers of population and demand. With improvements in technique and of knowledge about the requirements of specialized industries like pulp, changes can be expected and here the shift of the U.S. pulp production away from the west to the south and east can be quoted. The planned production of the raw material, of quick growing conifers, provides a very distinct comparative advantage over other areas. In the postwar years, it has become clear that West African timbers have a distinct comparative advantage in the hardwood trade. At present, by the silvicultural practices of the tropical shelterwood system, it is hoped, by the administration there, that this comparative advantage will be maintained or even increased — mainly through the encouragement given to economic species and their concentration on existing areas of forest.

There are so many factors which determine the optimum size of a forest estate within an economy that it can probably never be calculated accurately — and, as already noted, the figure calculated is bound to change. Mention has been made of the principle of division of labor and specialization. Resources invested in forestry by an economy must not be able to add more to the national income if they were transferred to other uses. A judgment on this, as stated, involves many difficulties. It involves looking ahead to future prices — to the terms of trade between timber and substitutes — both in terms of home and imported supplies. Furthermore, it involves considering whether land should be used for agriculture rather than for forestry or, indeed, whether the land should be used at all. It is a question of relative net products, and the optimum size of forest estate will be where resources are used in such a way as to provide equimarginal products of all factors of production in all uses. This is an economic optimum to be remembered even if it cannot be accurately delineated.

When forests exist and the question is how much to extract, then economic theory indicates that it will pay to extract timber up to the point where the marginal cost of extracting the timber equals the marginal

revenue produced.[4] From a practical point of view there is more likelihood that this can be more accurately calculated than the exact size of forest estate which constitutes an economic optimum.

Some reference must be made to experiences in the actual planning of land use. Many factors often combine to limit the full realization of land product potentialities. In a recent paper entitled *European and Near East Experience of Planned Land Use* presented to the Seventh British Commonwealth Forestry Conference, 1957, the author drew attention to some of these limitations which had been noted by the Near East Forestry Commission of FAO. The major limitations found to operate were:

1. inadequacy of existing laws, (*a*) for the settlement of disputed land ownership, and (*b*) for supervision of private forests;
2. lack of clear policy on segregation of forests from agricultural land;
3. inadequate knowledge of the extent of rights of user enjoyed by villages, tribes or individuals over forest produce and grazing;
4. insufficient and inadequate staffing of forest administrations;
5. inadequacy of research institutions;
6. inadequate machinery for forest propaganda.

It is clear that the economic potentialities of land are not always fully investigated, even in reaching decisions about land use. In defence of this, it is sometimes said that the essential data for making these economic enquiries are often lacking — but can it be said that vigorous attempts are made in such cases to fill in the statistical gaps as quickly as possible? Are officials who deal with land-use policy always aware of the key economic variables involved? The evidence is that they are not. This was clearly brought out in a study by Dr. K. R. Walker whose thesis for a D. Phil. degree the author was recently privileged to supervise. In this study he used the economist's approach to question existing methods of providing land for the Forestry Commission in the United Kingdom. Dr. Walker[5] came to the conclusion after discussing the problem of land allocation with many officials, that the method could only be described as "intuitive", and apparently the only principles which emerged were those of "least sacrifice" and "maximum benefit" to agriculture. In other words, it appeared to be in the national interest to transfer land from agriculture to forestry provided that the existing pattern of agriculture was not disturbed and that the forestry scheme could provide certain advantages for agriculture. (The only specific criteria appeared to be "ewes" per acre — a variable standard — and land poor enough was allowed to go for forestry.) In other ways it could be argued that government policy worked against the economic use of land and, in the United Kingdom, financial subsidies for marginal farm land prevented it being readily transferred to other uses. The economic potentialities of forestry have been given little weight although the Treasury expects the Forestry Commission to operate as a profitable enterprise, unless it has been given special authority to act as a social stabilizer.

The planning methods of allowing the Forestry Commission to have the "left-overs" from agriculture have not been a success, and it was perhaps not surprising that in 1959 there has been a change in policy — and no longer is a fixed area of forest to be acquired by the end of the century. Dr. Walker raised the question: how different could the supply of land for the Forestry Commission have been if it were to be judged solely on economic criteria? To answer the main question he made calculations about the relative productivity of land under forestry and agriculture, based on the costs and returns of 1953, assumptions having been made concerning trends in productivity of labor, wage costs, extraction costs in forestry, the rate of interest, and the terms of trade between forestry and agriculture. The brief conclusion was that at all moderate rates of interest (4 to 5 percent) forestry was likely to be considerably more productive than agriculture in most of the hill areas studied.

Four administrative changes appeared to Dr. Walker to be necessary to increase supply of land to the Forestry Commission so that it could fulfil its program on an economic basis:

1. The Forestry Commission should be allowed to pay a higher price per acre in order to obtain better land or larger blocks for scale economies.
2. The present indiscriminate method of allocating grants to hill farms must be replaced by one which limits the grants to those farms where the rise in the net output is not impossible to achieve.
3. The Forestry Commission should be encouraged to raise its wages in order to maintain and attract labor supply.
4. Government should adopt a less rigid attitude towards the entire question of type of land which is considered suitable for the Forestry Commission.

In the last resort, however, the decision is a political one and the economic considerations may consciously be weighted less than conservation or social influences. All the economist can hope to do is to point out the possible economic consequences of a given policy on a basis of what appear to be the determining assumptions.

---

[4] For a thorough analytical discussion of this moving equilibrium of a forest enterprise see K. E. Boulding, *Economic Analysis*, Hamish Hamilton, London.

[5] "The Forestry Commission and the Use of Hill Land: the Government Planning Approach Considered," *Scottish Journal of Political Economy*, Vol. VII, No. 1, February 1960.

Methods and Machines Used in North American Nurseries

Roland Rotty
Forest Service, United States Department of Agriculture

In order to make this manual useful for a wide range of nursery situations, information regarding methods and machines applicable to several levels of mechanization are included in it. For example, where possible, descriptions are given of equipment suited to the largest of nurseries, to moderate-sized ones, and to those without self-powered equipment. Alternate methods of accomplishing the same thing under different conditions are often discussed. It is hoped that presentation in this manner will enable a user of the manual to choose practices that will best suit his local conditions, and to decide which operations he will mechanize and which he will continue under time-honored, hand-labor methods. *The author makes grateful acknowledgment of the contributions of many nursery administrators and their associates in allied fields in the United States and a few in Canada.* *Much of the material used was taken from articles prepared by these men and published in various issues of* Tree Planters' Notes, *a publication of the Forest Service, U.S. Department of Agriculture. Considerable material has also been taken from* Planting the Southern Pines *by Philip C. Wakeley, Agriculture Monograph No. 18 (1954), and* Forest Nursery Practice in the Lake States *by J. H. Stoeckler and G. W. Jones, Agricultural Handbook No. 110 (1957), both published by the Forest Service, United States Department of Agriculture. This is a continuation from Vol. 14, No. 1.*

Transplanting

The transplanting of conifer seedlings to increase their size, root systems, and general vigor was once a widespread practice but it is less so today. Improvements in nursery techniques, especially in the matter of reduced densities and improved soil management have resulted in the production of seedlings that survive satisfactorily in areas once thought to require transplants. Large nurseries in central and eastern United States which a decade ago produced millions of transplants now produce transplants for only especially demanding areas. Since transplants generally cost much more than seedlings, this is an important advance.

Figure 40. – *Two-row transplanting machine.*

Courtesy, Forest Service, U.S.D.A.

Machine transplanting

Most transplanting is now done with special machines developed originally to plant celery and other vegetable crops. The machines commonly consist of two transplanters mounted as a self-propelled unit (Figure 40). An operator places trees in each transplanter unit which then plants them in a trench opened and closed by the machine. A speed of from 40 to 50 trees per minute for each operator is attainable after training.

These self-propelled machines are also self-guided. Common practice is to make a 2- to 3-inch deep guide furrow across the field, using a V-shaped blade of some nature. The furrow must be carefully shaped and exactly located since it controls the work that follows. Some nurseries use two 1-inch iron pipes laid side by side for the furrow (Figure 41). These pipes serve as a track for a flanged front wheel.

To prevent deviating from the prescribed course, the machine must be kept balanced, particularly as concerns the draft placed on the power unit by the two planting units. The operators selected to thread

Figure 41. – *Pipe tracks to guide front wheel of self-propelled transplant machine.*

Courtesy, Forest Service, U.S.D.A.

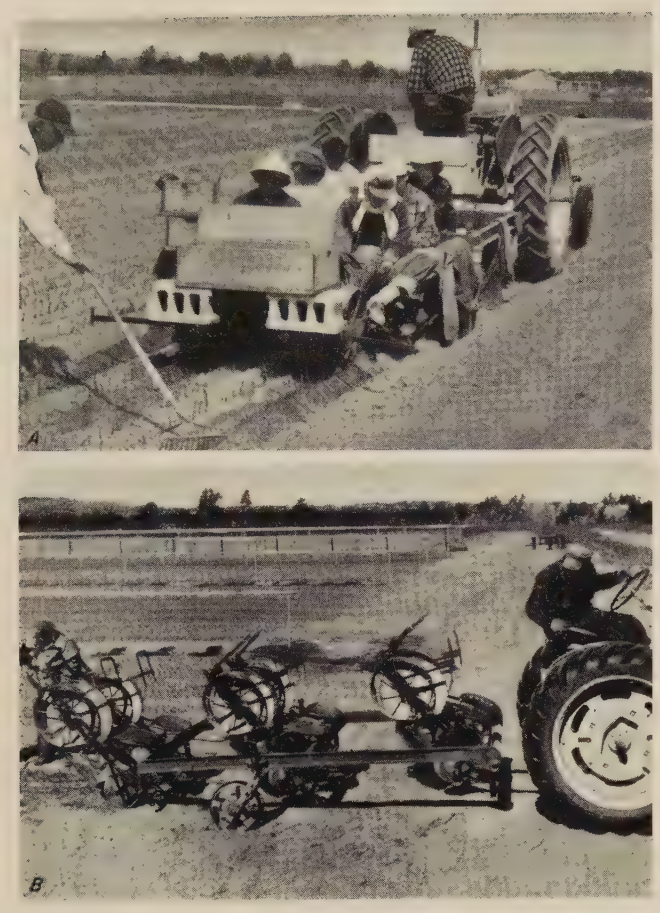

FIGURE 42. – A. *Six-row transplant machine at work. Usually a machine of this nature is enclosed with a light frame and canvas, or polyetheylene film, to protect the trees and workers from drying winds.* B. *Machine in raised position to permit travel on road.*

Courtesy, Kimberly-Clark of Michigan, Inc.

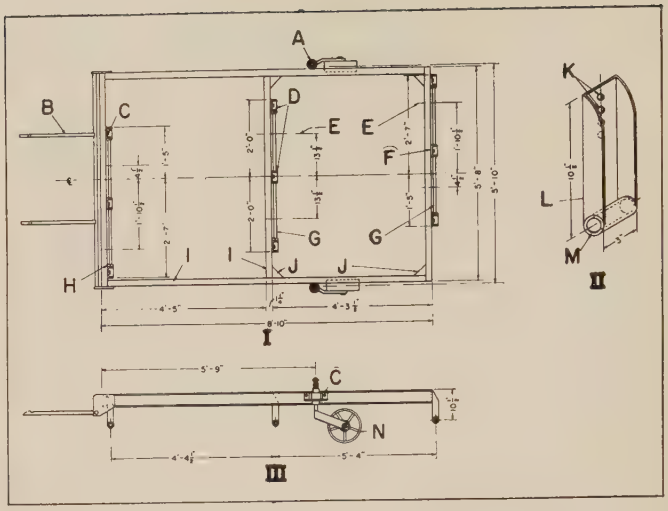

FIGURE 43. – *Construction details for six-row transplanting machine.*

Courtesy, Kimberly-Clark of Michigan, Inc.

I *Top plan*
II *Hanger detail*
III *Side view*

A. *Drill swivel for removable lock pin in each wheel*
B. *Farmall quick hitch drawbar coupler*
C. *Cap screw* ($1/2 \times 1 1/2$ *in.*)
D. *Channel hanger* ($1 1/4 \times 3$ *in.*)
E. *Drill cross members to correspond to holes in hangers*
F. *Center line of planter units*
G. *Steel drawbar* (1×48 *in.*)
H. *1-in. collard and setscrews hold bar in place; use same size collars to hold planters in position*
I. *Channel* ($1 1/4 \times 4$ *in.*)
J. *Steel fillet* (3×3 *in.*)
K. *Drill 4 holes 1 in. apart for* $1/2 \times 1 1/2$*-in. cap screws*
L. *3-in. channel cut to fit tube*
M. $1 1/2$*-in. steel tube, ream; 1-in. still drawbar*
N. *Swivel wheel*

the seedlings into the pockets on the revolving disks, therefore, should be of approximately the same weight.

The plant pockets on the revolving disk that sets the trees are spaced either 2 ¼- or 2 ½-inches apart on the disk. The speed at which the disk turns varies with the gear ratio used on the disk and the packing wheels that furnish the power to turn it. Therefore, the spacing of plants can be increased or decreased by adjusting the speed at which the disk turns. Standard spacing in the United States Department of Agriculture Forest Service nurseries is 2 inches and a fraction, or approximately 5.4 seedlings per linear foot.

It is essential that the furrow-opening shoe be set deep enough to permit the roots of the seedlings to hang straight when they reach an upright position. If the seedlings are set at an angle, or the roots are planted in a horizontal position, deformations result which are difficult to handle when the trees are field planted.

Where more than one machine is operated in the same area, a foreman is usually assigned to supervise and direct the work. It is his duty to assist in turning the machines at the ends of the beds, to lay out new beds for planting, and to service the machines with seedlings. To avoid interruptions in the planting work, a supply of seedlings is kept at each end of the bed.

The production obtained by machine planting varies with the size and age class of seedlings planted, and the amount of ineffective time used in turning and servicing the machine. At a nursery in Michigan run by the Forest Service of the United States Department of Agriculture, where the length of beds ranged from 450 to 500 feet, a production of 30 thousand trees per 8-hour day was obtained with one two-operator machine.

Self-propelled machines are used in some nurseries, others mount a battery of 6 to 8 planting units on a frame pulled by a tractor, as shown in Figure 42. Such a tractor must be equipped with special gears so that it will move forward at a rate of only 8 to 10 feet a minute (Figure 43).

Hand transplanting

Prior to the development of transplant machines, all transplanting was done either by hand or with a "transplant board." Operations using the transplant board can be very efficient, and the method has much

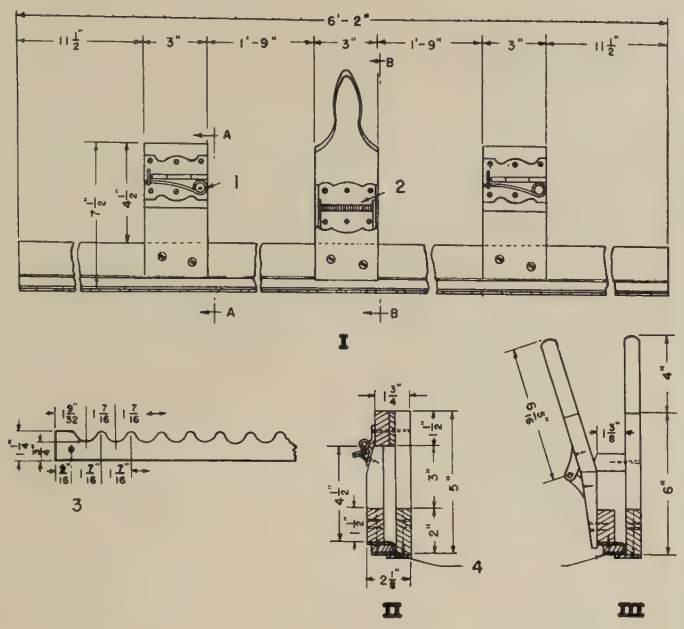

FIGURE 44. – *Construction details for a Bessey-type transplant board.*

Courtesy, Forest Service, U.S.D.A.

I *Front elevation*
II *Section A-A*
III *Section B-B*
1. *Holdback hinge*
2. *Non-holdback hinge*
3. *Metal strip* (1/8 × 6 *ft.* 2 *in.*) *with notches filed smooth*
4. *Rubber belting* (1/8 × 3 *in.* × 6 *ft.* 2 *in.*)

FIGURE 45. – *Transplanting with a hand board.*

Courtesy, Forest Service, U.S.D.A

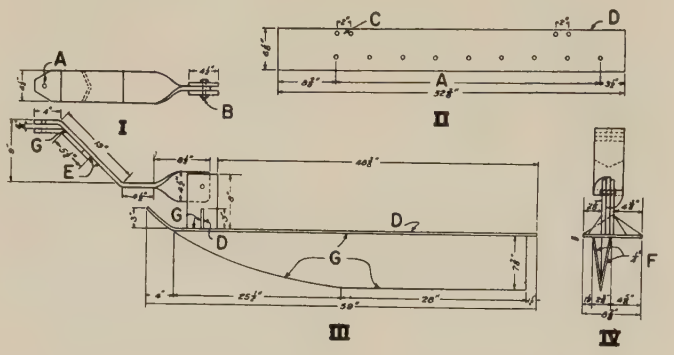

FIGURE 46. – *Tractor-drawn device for opening transplant trench.*

Courtesy, Forest Service, U.S.D.A.

I *Top view of hitch*
II *Ford tractor hitch attachment*
III *Side view*
IV *End view*
A. *Drill* (5/8 *in.*)
B. *Bolt* (1/2 *in.*)
C. *U-bolt* (1/2 *in.*)
D. *Steel plate* (3/8 *in.*)
E. *Steel plate* (5/8 *in.*)
F. *Steel plate* (1/4 *in.*)
G. *Weld*

to recommend it in places where machines are unavailable or are not justified by the amount of transplanting to be done. Various types of transplant boards have been designed by nurserymen based upon local requirements and personal preference. The types shown in Figures 44 are made of wood and serve the purpose well. If possible, this planting device should be made of aluminum or other light metal channels or angle bar shapes, because wood sometimes warps and fails to hold each seedling firmly in position. For a crew operating at maximum efficiency, three boards are needed for each planter — one board awaiting filling, one being filled, and one being planted.

There is no "standard" length for transplant boards nor any "standard" spacing between seedlings; these factors vary according to local needs. Boards as long as 8 ½ feet and accommodating 75 trees have been used effectively in some places. In the operation pictured in Figure 45, the trench for the trees was being made with the hand trencher shown at the left of the board. An easier way is to open the trench with a tractor or horse-drawn trencher, the construction details of which appear in Figure 46. Lacking such a device, a plow can be made to serve.

If relatively few trenches are needed or no traction equipment is available, a manual trencher will serve satisfactorily. In heavy soils, a workman with a spading fork may be required to loosen the soil immediately before trenching, despite previous plowing (Figure 47).

Because seedlings must be protected from drying out, their threading into transplant boards should be done in a shelter (Figure 48). The shelter commonly used in most nurseries is a skeleton frame made of light-weight material (Figure 49) and covered with canvas or with insect screening painted with a thick paint. Its front is left open, or canvas flaps hang loosely, to provide easy access for changing boards. If storage

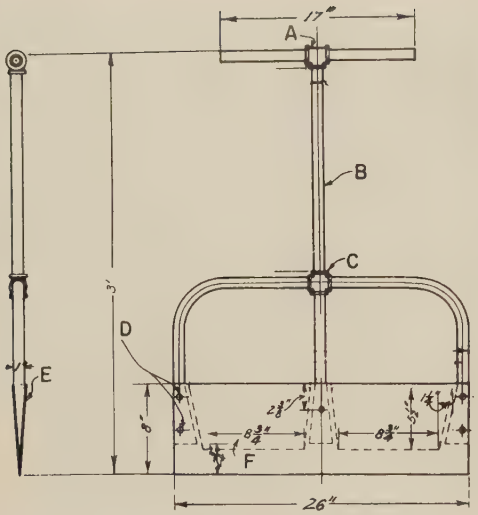

FIGURE 47. – *Hand trencher and construction details.*

Courtesy, Forest Service, U.S.D.A.

A. *Standard malleable iron pipe tee.*
B. *Frame and handle to be of 3/4 in. iron pipe*
C. *Standard malleable iron cross.*
D. *Countersunk rivets (1/2 in.)*
E. *Crucible steel plate (1/8 in.)*
F. *Wood pieces inserted between plates*

FIGURE 48. – *Transplant coop.*

Courtesy, Forest Service, U.S.D.A.

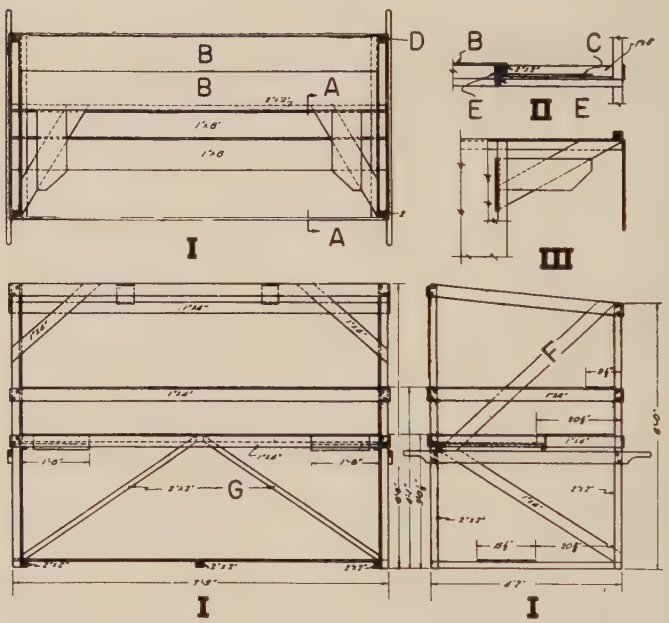

FIGURE 49. – *Working drawing of transplant coop.*

Courtesy, Forest Service, U.S.D.A.

I *General plan*
II *Section, A-A*
III *Plan of shelf*
A. *Section (see II)*
B. *Shelf*
C. *Corner shelf*
D. *Post*
E. *Cleat*
F. *Brace*
G. *Shelf braces*

space is at a premium, the coops should be bolted together and disassembled for flat storage when not in use.

Two shelves are provided in the shelter, one for the transplant board that is being filled and the other about 15 inches above for the empty board that is returned by the planter. The lower shelf should be placed at a convenient working height for the threader so that he can keep the boards filled at a steady pace. It is important that the shelter be long enough to accommodate the transplant boards. A portable oil heater or charcoal brazier will add much to the efficiency of the threaders on cold days.

If only one threader is used in a coop, he can save much time and walking by starting at one end of a board, completing and closing it. He then moves in the opposite direction as he fills the board that the planter has returned to him. Because the threader sees each seedling as he threads it, he should be trained to recognize inferior trees and instructed to discard them. If the work is proceeding very rapidly, two threaders are needed in each coop.

In small areas where long, continuous rows are impractical, an efficient organization can be developed to plant three beds simultaneously. In Figure 50, the rows of trees are being planted at right angles to the paths

FIGURE 50. – *Transplant crew organization for small areas.* A. *Foreman.* B. *Spader to loosen soil compacted by tramplings to facilitate work of trencher.* C. *Trencher.* D. *Planter.* E. *and* F. *Threaders inside coop.* G. *Tender to supply trees to coops, rake between rows if needed, and do general work.*

instead of parallel to them, but the other arrangement would be equally feasible. This system requires the least walking for the planter, because the coop is kept close to the planting front.

A transplant board of the Bessey type (without a spike to hold it in place during planting) is used in the following description in setting the seedlings:

1. The planter takes a filled board from the coop and walks to the open trench.
2. At the trench, he stands with his weight on his heels far enough back to prevent caving in its walls, and with a slight swinging motion of the board lowers it so that the roots of the seedlings fall into their natural position in the trench.
3. Now he tilts the board away from him very slightly, rests it on the far side of the trench and, by shifting his weight to his toes, caves in two small sections of the trench further to support the board. If this is correctly done, the board will now stay in the proper position without other holding.
4. He then lets go of the board, stands erect, and with the heel of one foot firmly tamps the soil around the roots of the seedlings as he moves from one end of the board to the other. (The process of opening the next trench will further tighten the soil around the tree roots.)

After tamping is completed, he opens the board and returns it to the top shelf of the coop, withdraws the full one which should be awaiting him on the bottom shelf, and repeats the process. If soil preparation and setting and tamping the trees are done properly, the additional work of removing excess dirt from the crowns of the plants and filling in low spots will be cut to a minimum.

TRANSPLANTING INTO POTS

For planting sites where soil and climate are especially severe, it is best to produce trees in pots. Pots made at the nursery from 15-pound tar paper roofing felt to the size required for local conditions are satisfactory. Equipment for forming complete pots before filling need be hardly more than a paper cutter, two rollers, and a stapling machine. A wringer from a discarded washing

FIGURE 51. – *Roller to score paper prior to folding into a pot.*

Courtesy, Agricultural Research Service, U.S.D.A.

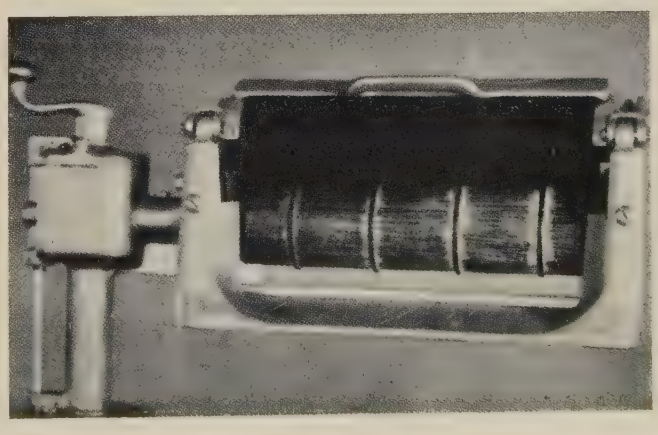

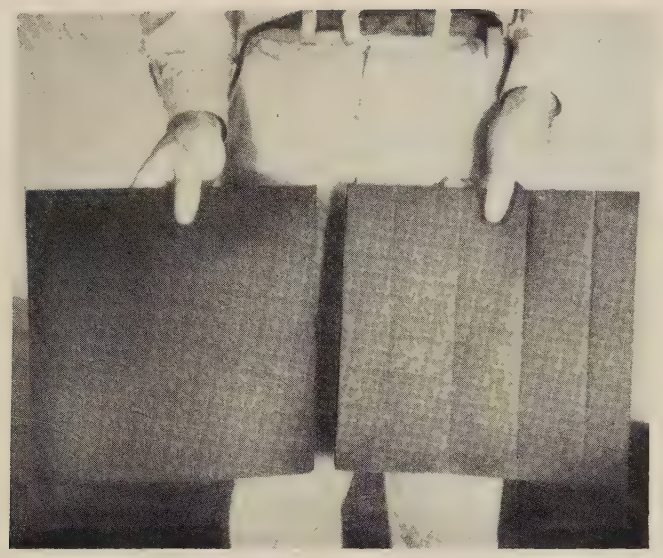

FIGURE 52. – *Paper before and after scoring.*
Courtesy, Agricultural Research Service, U.S.D.A.

FIGURE 53. – *Foot-powered pot shaper.*
Courtesy, Agricultural Research Service, U.S.D.A.

machine (Figure 51) can be modified to serve admirably as a device for scoring paper.

Prior to scoring, the paper is cut into individual pieces. The roll in which the paper is bought can be sectioned to desired length with a power saw, and then into separate pieces by cutting them from the strip with a common papercutter. These pieces are then passed through the roller for the scoring (Figure 52).

FIGURE 54. – Above. *Potting bench with pot half filled withsoil and seedling.* Below. *Completed pot.*
Courtesy, Soil Conservation Service, U.S.D.A.

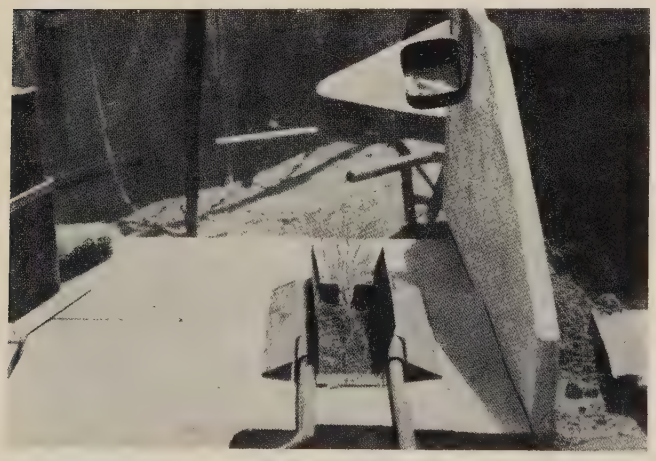

Because of this scoring, the paper folds readily into a rectangular tube that can be fastened with a hand-stapling machine. If a closed bottom is required, it can be formed by slitting the corners of one end of the tube with a clipper and interlacing the four tabs.

Although the scoring machine in Figure 51 was made by modifying the rollers of a powered washing-machine wringer, the same thing could be done equally well with a hand-powered roller made at a local carpenter or machine shop. The power is a convenience but not a necessity.

Such paper can also be formed into a pot by merely folding it around a wooden block of desired size, or more simply, by pushing it into a mold with such a block. A device to do this by foot power is shown in Figure 53.

The device in Figure 54 permits forming the pot, filling it with soil and planting the tree in it in a concurrent series of operations. Details of its construction are shown in Figure 55. A sheet of the precut paper is pushed down into the potting box to form a trough. This trough is then half filled with soil and a seedling's roots are spread naturally on the soil.

The remaining half of the soil is then placed on the roots and the pot is completed by turning the handles to overlap the projecting edges of the paper. They are fastened together with a hand stapler. The whole operation takes but a few seconds. The potted plant is ejected upwards from the form by pressing the foot lever.

FIGURE 55. – *Construction details of potting machine bench (1 inch = 1 foot).*

Courtesy, Soil Conservation Service, U.S.D.A.

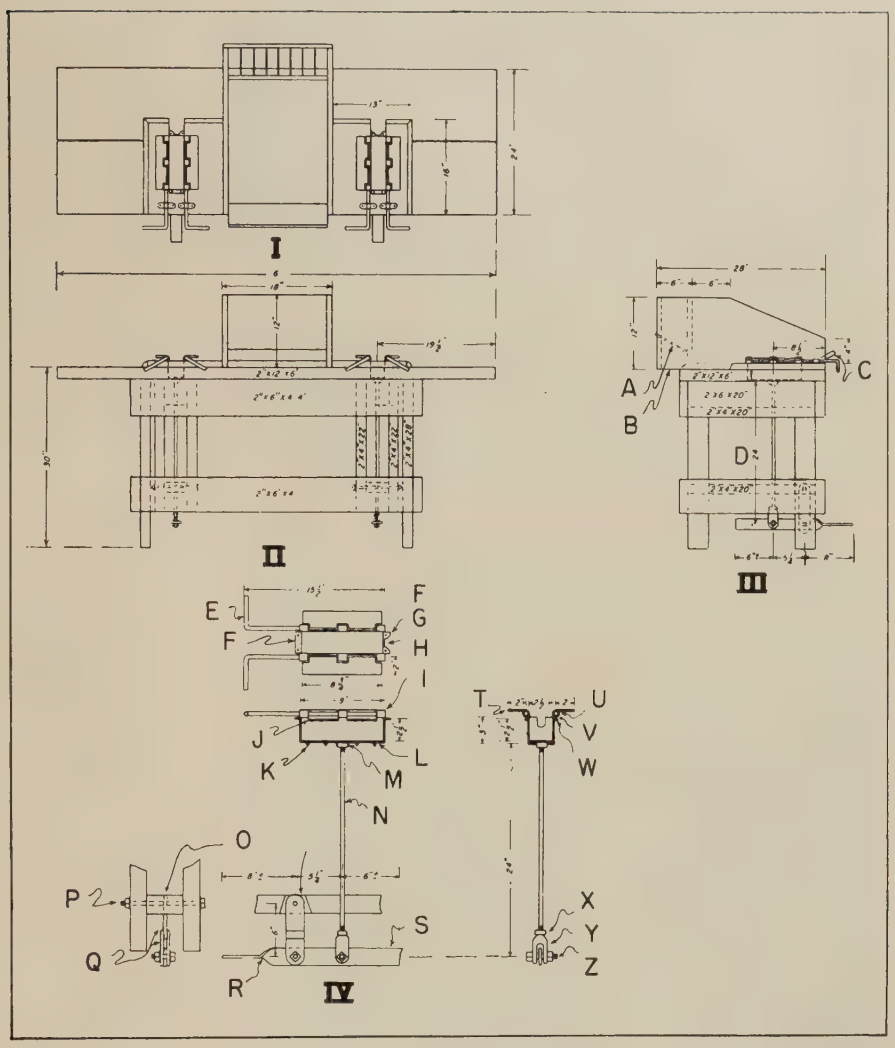

I *Top view*
II *Front view*
III *End view*
IV *Detail of potter*

A. *Slant bolts or nails for paper rack*
B. *Bottom left open*
C. *Slant 4-in. board to hold back fill material*
D. *Adjustable*
E. *Handles 1/2 in. rod*
F. *Fold edges out and bolt to table*
G. *Cut ends of box 3/4 to 1 in. longer*
I. *Pipe (3/4 × 1 in.) split and spread to take 3/8 in. round rod and welded to box for hinges*
H. *Slot (1/2 × 3/4 in.) 1 in. deep, for stem of plant*
J. *Fold edges out allowing room for fin*
K. *Rods (1/4 in.) welded to bottom of box for stops*
L. *Floor plate*
M. *Nut (1/2 in.) welded to center of floor plate*
N. *1/2-in. round rod threaded*
O. *Cut tapered slot in 2 × 4 in. for free movement*
P. *Bolt (1/2 × 8 in.)*
Q. *Strap (1/4 × 2 in.) welded to form clevis*
R. *Bend strap for foot pedal*
S. *Length variable for counterbalance*
T. *Strap for fins (1/4 × 2 in.)*
U. *Weld fin to center of rod*
V. *Fold edges out for pipe weld*
W. *Edges between pipe sections cut and bent out to allow room for fin*
X. *Lock nut for adjustment*
Y. *Clevis or turnbuckle (1/2 × 2 in.)*
Z. *Bolts (1/2 in.)*

Weeding

Weeding by use of sprays

In nurseries large enough to justify the cost of a power-spraying machine, it is now standard practice to do the weeding in conifer seedbeds with selective sprays that kill the weeds but spare the trees. Prior to 1942, selective weed sprays were unknown to the nurserymen. Soil treatments to kill weed seed in advance of seedbed sowing were in use but were not very satisfactory. The possibilities of weedicide sprays were demonstrated by certain vegetable growers, and at the guayule rubber plant nurseries in 1943-45. By 1949, the technique had become widespread.

The product most generally used for this purpose at present is "mineral spirits." This is also known as white spirits of petroleum in many European countries. In America, it is sold under a variety of trade names by various oil companies. Derived from napthenic petroleum, mineral spirits have an initial boiling point of 300° to 320° F., an API gravity of 48 to 50, and an aromatic hydrocarbon content of 10 to 20 percent. Weed kill appears to be approximately proportionate to the aromatic content of the product being used.

Pines, spruces, firs, and junipers tolerate mineral spirits, but other conifers, notably the larches, do not. Some tree species are moderately sensitive and may show injury if more than 40 gallons per acre are applied in any one treatment. Still other species, such as red and jack pine, appear to tolerate as much as 80 to 100 or more gallons per acre of spray with little or no harmful effect. Local experimentation is required to determine the effectiveness of the spray at specific nurseries. Its use on hardwood species is not recommended, unless local tests have clearly demonstrated that it will not injure them.

Much research is underway in this method of weed control and the techniques are gradually being improved.

The technique and equipment used at present is as follows:

1. Equip sprayer with low-pressure manifolds to permit capacity spraying for weed control and high-capacity spraying with insecticides or fungicides; and add teejet nozzles that throw a fan-shaped spray. Nozzles should have 100-mesh screens and be spaced 20 inches apart on a boom 17 to 19 inches above the bed.
2. Keep the working pressure below 60 pounds per square inch to avoid "fogging." Fogging causes wind drift, which results in irregular application and sometimes severely injures pines.

FIGURE 56. – *Trailer type of spraying machine.*
Courtesy, Forest Service, U.S.D.A.

3. Regulate rate to avoid overdosage. Start spraying 10 to 14 days after removal of seedbed covers or after seedlings emerging through mulch have acquired a healthy green color; apply 10 to 12 gallons per acre 2 to 4 times a week. Later, applications of 25 gallons an acre about once a week are satisfactory. Heavy mortality has followed application of 40 to 80 gallons an acre on very young seedlings.
4. Water the seedbeds several hours before spraying, except right after a rain. Water the older and larger seedlings more heavily. *Do not spray* seedlings while the foliage is still wet it they have secondary needles, as injury results. *Do not water* beds immediately after spraying, because heavy watering or rain soon after spraying reduces the effect on weeds.
5. During the first few sprays of the growing season, avoid spraying at excessively high temperatures and at temperatures below 60° to 75° F.; spraying at excessively high temperatures increases injury to pines, and at the lower ones, decreases weed killing. Spraying at high temperatures, in general, has not injured seedlings and has increased the rapidity and completeness of weed kill.

Suitable spray machines are commercially available from any agricultural equipment dealer. For nursery use, the machine is usually equipped with a spray boom wide enough to cover three beds at a time but hinged to fold back upon itself to facilitate movement from place to place (Figure 56). It is also desirable that the boom be equipped with an angled nozzle with shut-off valve at each end to permit spraying into fence rows or other obstructions, and with shut-off valves within the boom itself so that part of it can be closed if desired. A screen or filter in the line between the

FIGURE 57. – *Spraying machine; tractor-carried type.*
Courtesy, Iowa State Department of Conservation

tank and the pump to trap solid particles will save the annoyance of clogged nozzles.

Nurseries of such size as to require large-capacity tanks usually carry them on a trailer pulled behind a tractor. Such units may be powered by a separate motor to operate the pump or with a pump mounted on the tractor. The man riding the trailer operates the control valves, watches for clogged nozzles, and raises the boom or sections of it to facilitate turning or passing over terraces. However, it is possible to design the machine so as to avoid use of this extra man.

Some nurseries find it practical to mount a tank (as an oil drum) directly onto the back of a tractor and power the spray pump with the power take-off or the engine's fan belt (Figure 57). Such a piece of equipment can be assembled by a mechanic from commercially available parts and need not be at all costly.

The use of a backpack or hand-carried sprayer, either self-powered or manually powered, to spray small areas with weed killer is not recommended. With a manually directed nozzle, it is most difficult to obtain a uniform distribution of the required amount of material. As a result, the seedlings in parts of the bed may be killed or stunted, while the weeds in others receive less than an effective dose and remain unaffected. Nurseries with only a few beds or with experimental beds had better rely on hand weeding.

Weeding by use of soil fumigants

A wide variety of soil fumigants have been introduced into nursery work in the last few years. In varying degree, they eliminate all weeds, diseases, nematodes, and insects. Nurseries occasionally report spectacular benefits of improved germination, seedling vigor, etc.,

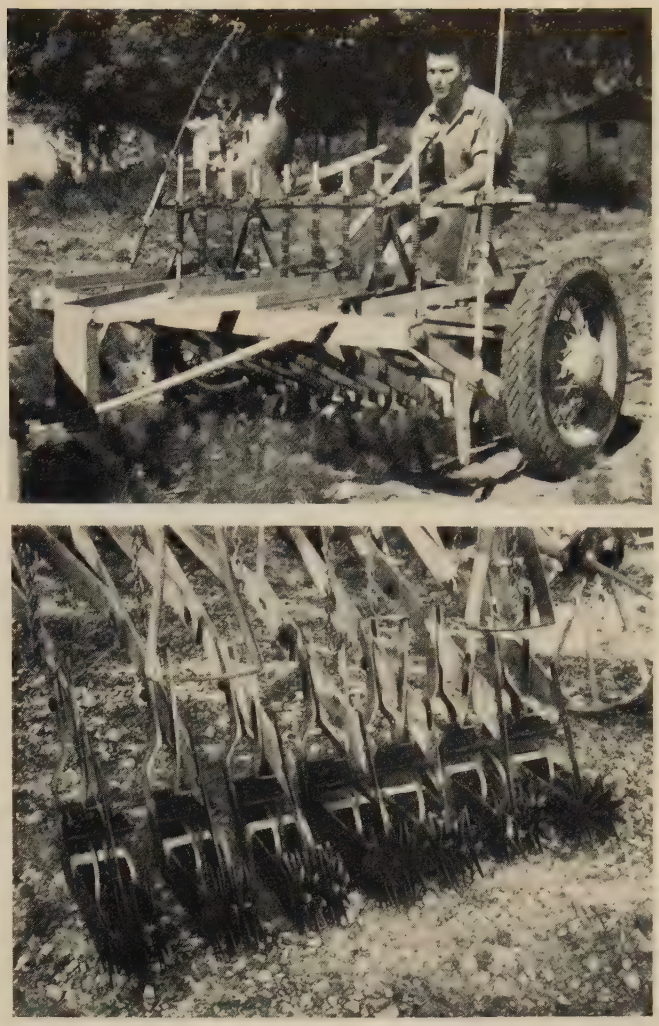

Figure 58. – *Cultivator to kill weeds between bands of trees, and details of cutting knives.*
Courtesy, Tennessee Valley Authority.

Figure 59. – *Construction details of seedbed cultivator.* Courtesy, Tennessee Valley Authority.

I *General plan*
II *Side view*
III *Detail "E"*
IV *End view*

A. *Bar*
B. *Sliding bar*
C. *Bar frame*
D. *Bolt*
E. *See II*
F. *Cultivators controlled as a unit by steering mechanism. See II*
G. *Standard pipe (2 in.)*
H. *Wheel*
I. *Slot (2 in.) for adjustment*
J. *Foot rest*
K. *4 wheels from pulverizer attachment*
L. *3 prongs from 5-prong weeder*
M. *Collar*
N. *Stand pipe (3/4 in.) for spacers*

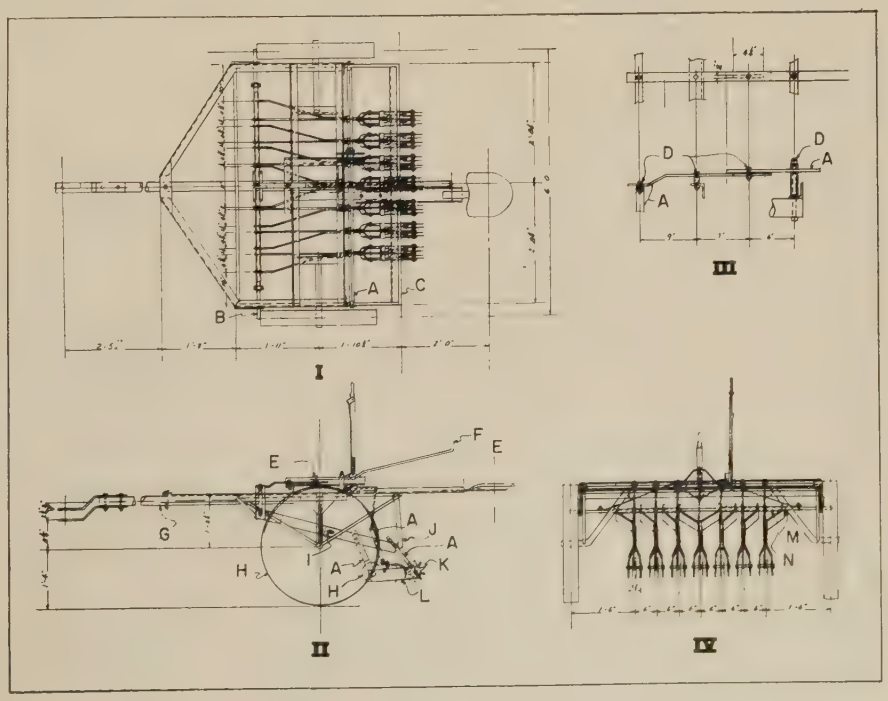

after using them. When fully successful, they eliminate nearly all weeding for the year, and greatly reduce it for several years to come. Their use is especially valuable to eradicate weeds that propagate from rhizomes, stolons, or bulbs and thus resist hand pulling, hoeing or spraying. Unfortunately, the most effective fumigants are very costly, dangerous to handle without skilled labor, and may require costly special equipment. No one of them has come into common use, and general recommendation cannot be made. Information concerning these products can be obtained from dealers in agricultural chemicals.

Weeding by use of soil sterilants

Controlling weeds by hand methods in storage areas, on road shoulders, and in other places where plant growth is unsightly or unwanted can be costly in large nurseries. Specialized chemicals have recently been developed to sterilize soil and prevent all plant growth for periods of a year or more, the duration of the treatment depending upon the rate of application. Information concerning these products can be obtained from dealers in agricultural chemicals.

Weeding with mechanical cultivators

Cultivators that operate from behind a tractor can be built to cultivate and kill weeds between rows of trees, as in seedbeds sown in drills. Such a cultivator, first designed at an Illinois State nursery and later improved at a Tennessee Valley Authority nursery, is shown in Figures 58 and 59. The operator on the cultivator can move it to the right or left by pushing on the tiller bar and thus guide the machine between crooked rows of trees.

Pests and Diseases

Insect and disease control

There seems to be an almost infinite variety of insects and diseases that attack seedlings in every stage of development and every part of root and shoot. The seriousness of such pests and plagues differ for the various tree species and even among localities in which nurseries grow the same species. Hence, cures or preventatives that are simple and 100 percent effective in some places or during some years, fail utterly in other places and times. Direct correspondence with entomologists, pathologists, and other appropriate technicians at research stations in the affected locality, or in similar localities, is the best means of obtaining specific information on any particular problem.

Pests and plagues are frequently fought by the application of certain sprays. Sprayings equipment used in weed control work is equally useful in this type of work.

In combating certain diseases, there has recently come into use a technique of applying protective coatings of suitable chemicals to seed prior to sowing. This is spoken of as "pelleting" the seed, and it is quite effective. It consists of first coating the seed with a "sticker," and then coating it with an effective chemical or chemicals. After drying, the seed is then sown in the normal manner. Allowances must be made in the sowing rate for the increased size and weight of pelleted seed.

The sticker is applied by pouring an appropriate quantity over the seed which is then tumbled in some sort of a revolving drum. Sticker compounds made from methyl cellulose or latex are on the market. Either serves the purpose well. After the seed are evenly coated with the sticker, an effective chemical is put in and the tumbling continued until all seed are uniformly coated. If desired, a second chemical, such as a bird repellant, can be applied in the same manner without additional sticker. After coating, the seed is spread on a tray or sheet to air dry. The treating process works best on small batches, and it should take but 3 or 4 minutes for a 10-pound batch. Excessive tumbling should be avoided to prevent chipping or damage to the seed, and the dry seed should not be rubbed more than necessary because the protective coat may be damaged.

A small concrete mixer with a capacity of 1 cubic foot is commonly used in this work, but any can or box on a handcrank or foot treadle would serve. For a 10-pound batch of seed, a United States Forest Service nursery in Indiana uses a 20-gallon drum. On a small-scale job, the work can be done without any machinery; it is perfectly practical to pour the sticker or the effective chemical over the seed and then stir it by hand or pour it from one vessel to another until distribution is achieved.

Bird and rodent control

Until recently, bird and rodent depredations were a serious cause of loss in newly-sown or germinating seedbeds, and elaborate protective screens were necessary. These were costly to build, to maintain, and to put in place and remove. The discovery of effective repellants and the development of the pelleting technique have eliminated this problem at nurseries using the technique.

The chemicals in general use at present are sublimed anthroquinone or tetramethylthiuram-disulphide 50 percent (50 percent TMTD). Some nurseries prefer the latter because it offers some protection against rodents and is also effective (as in Wisconsin) as a control for the damping-off disease. However, other nurseries feel that it has a slight retarding effect upon germination and prefer to use anthroquinone with a specific rodent repellant added.

The quantities of the chemical required for 100 pounds of seed (loblolly pine and slash pine) is 16.6 pounds of the 50 percent TMTD, or 20-pounds of the anthroquinone. They are applied as coatings to the seed in the manner described under the section on insect and disease control.

Figure 60. – Construction details of sled-type digger for pulling with cable to a tractor or capstan.

Courtesy, Forest Service, U.S.D.A.

I *Detail of cutting runner*
II *Detail of plate*
A. *Cut web before bending*
B. *Bolts (12/16 in. for 3/4 in.)*
C. *Rivets (9/16 in. for 1/2 in.)*
D. *Plate*
E. *Plow bolt*
F. *Shakers to be riveted on for digger, removed when used as a root pruner*
G. *Eye bolt (3/4 × 5 in.)*
H. *Eye (1 1/2 in.)*
I. *Steel shoe*
J. *Old road scraper shore*
K. *Steel plate*
L. *Steel cable*
M. *Bolts (3/8 in.)*

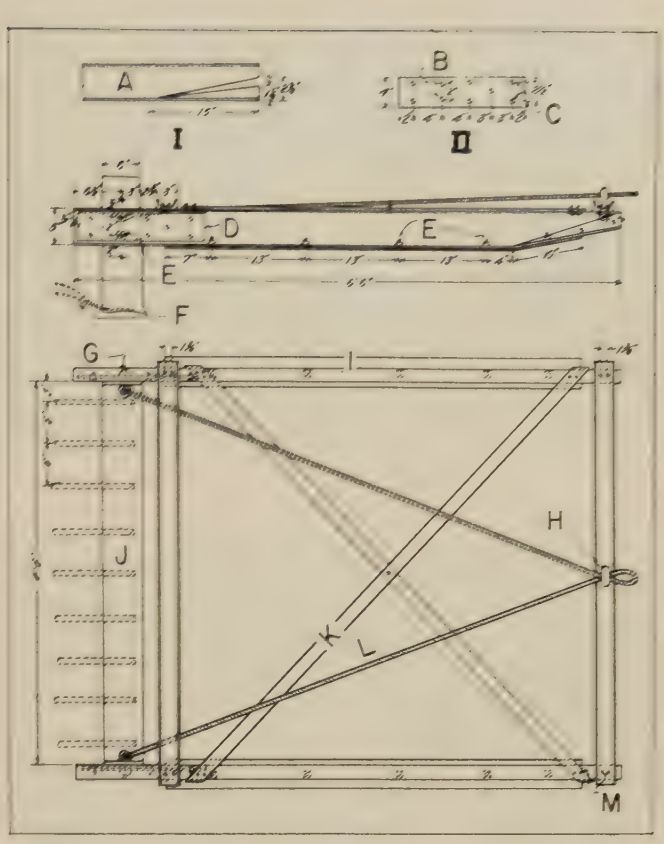

Lifting

In large nurseries where labor is scarce and costly, the manual digging of trees is impractical. Many models of mechanical lifters have been developed to lift the soil and loosen trees so that they are easy to pull by hand without additional digging. The various models presented here are only illustrative of the general idea. There are others that perform equally well.

The sled type lifter shown in Figure 60 can be pulled directly behind a tractor, or by a cable to a powered winch. If a suitable tractor or winch is unavailable, it can be pulled with a cable to a capstan turned by a team of horses. The latter is in fact the original method used for this model of lifter. The design for a cable carrier is shown in Figure 61.

Tree lifters that vibrate and thus shake the soil from the roots of the trees being dug have been developed at some nurseries. They loosen the soil more than the other types and thus facilitate getting the trees out of the soil with less damage to the small roots. On such diggers, the heavy digging blade itself does not vibrate but fingerlike strips that extend backwards from the blade are vibrated up and down by a camshaft driven by a chain to a power unit mounted at some convenient place above the digger, or driven by the power take-off of the tractor. A plan and bill of material for a machine developed at the United States Forest Service nursery in Eveleth, Minnesota, are shown in Figure 62.

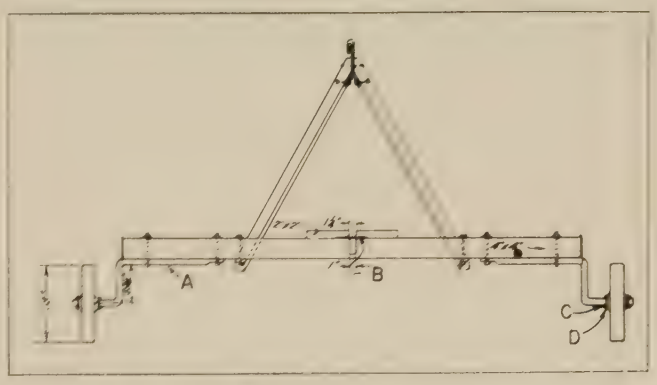

Figure 61. – Cable carrier, required to carry cable and prevent it from damaging trees.

Courtesy, Forest Service, U.S.D.A.

A. *Steel axle (1 in.) total length 33 in.*
B. *Thin metal plate under 2 × 2 in.*
C. *Cotter pins (1/4 × 1 1/2 in.)*
D. *Washers between wheels and cotter pins*

Another type of vibrating tree lifter, which removes nearly all of the soil from the roots, is used at several Pennsylvania State nurseries and at the United States Forest Service Chittenden nursery in Michigan (Figure 63). It is nothing more than a two-row mechanical potato digger, and it works well in certain soils when the seedlings are of sufficient size and density.

For such a digger to serve satisfactorily, the trees should be 4 inches or more tall and dense enough to have their needles interlacing to some extent. Tiny trees will shake through the shaker chain belt, and scattered trees will fall over and become a hopelessly jumbled mass. This type of machine does not operate well in soils that hold together and resist shaking.

The lifter pictured in Figure 64 hangs from the center of a wheeled tractor in a position where it can be watched by the driver as he steers the tractor. He can raise or lower it immediately with the hydraulic controls he has at his finger tips. It was developed at the North Dakota State nursery at Towner, North Dakota, and

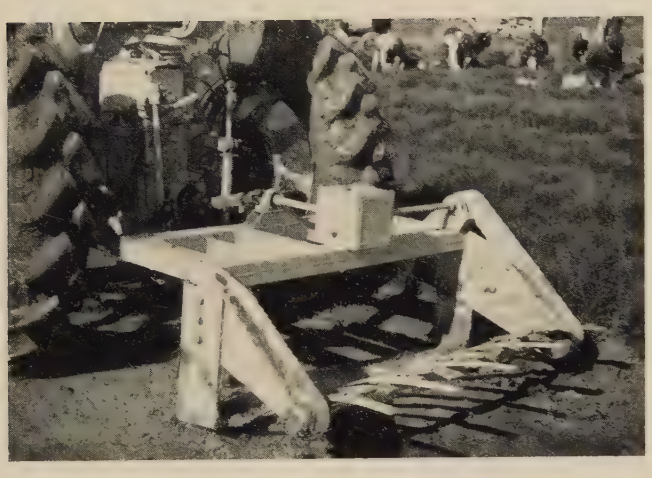

FIGURE 62. – *Tractor-drawn vibrating tree lifter;* above, *front view,* below, *side view. The over-all length of the board and the size of the notches may be varied to fit local needs.*

Courtesy, Forest Service, U.S.D.A.

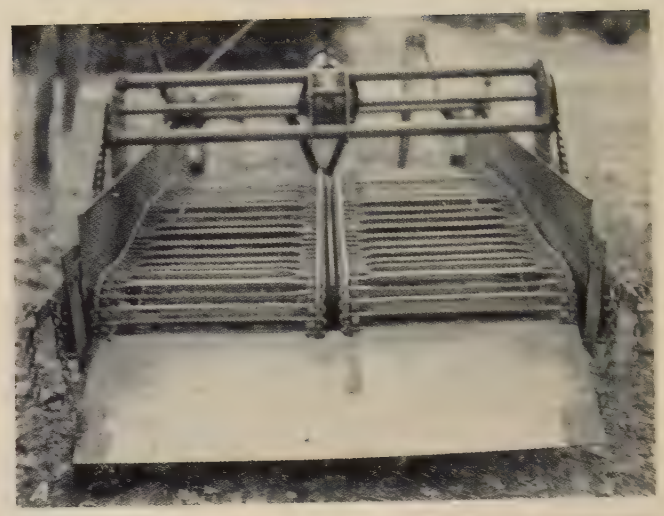

FIGURE 63. – A. *Vibrating belts of two-row potato digger used to dig trees.* B. *Potato digger at work.*

Courtesy, Forest Service, U.S.D.A.

does its work well. It is simple, rugged, and quick to respond to the tractor driver's control. Only 4 bolts are used to attach or remove it from the tractor. Contruction details are shown in Figure 65.

A lifter for attachment behind a tractor is shown in Figure 66, and its construction details in Figure 67. This was developed at the Michigan State University nursery at Sault St. Marie, Michigan. It can be used with either a wheeled tractor or a crawler tractor that has a suitable hydraulic-hitch mechanism.

The one-row tree lifter (Figure 68) is especially suitable for use on hardwoods lined out into rows. It was built by the Institute of Paper Chemistry tree genetics nursery at Appleton, Wisconsin. The lifter is designed for use behind a tractor with a three-point hydraulic hitch. By means of this hydraulic control, the lifter can be run at any desired depth from 0 to 9 inches. The 18-inch rolling coulters, which are mounted on the frame in front of the lifter shoe, prune the side roots. The lifter shoe prunes the lower roots, lifts the trees, and loosens the soil with a minimum of injury to the root system.

Operating lifters on heavy soils when the ground is too dry or too wet, or at too great a speed under any condition, breaks many seedling roots; there is a consequent reduction of vigor or death of such seedlings when planted. After the lifter has undercut the seedlings, care must still be used in getting their roots out of the ground, by hand or with forks or shovels, because there may be further breaking of the roots or stripping of their bark. Supervision of the lifting should include occasional sifting of the seedbed soil as well as close scrutiny of washed trees to learn the extent of root damage. Changes in tractor speed, blade angle, and laborer techniques or a wait for proper soil-moisture conditions, may be required to reduce such damage.

Packing for Shipment

COUNTING AND GRADING

There is no "standard" or "best" way to organize this phase of the work. Organization varies according to size of trees, required output per day, kind of labor, and demands of the customers. Some nurseries that produce trees of uniform size do not grade or count their stock-

FIGURE 64. – A. *Wheeled tractor, center-mounted, hydraulic tree lifter.* B. *Close-up view of mountings for blade and pump.*

Courtesy, North Dakota State Forestry Department.

FIGURE 66. – *Diagonal view of rear-mounted lifter for tractor with hydraulic hitch.*

Courtesy, Forestry Department, Michigan State University

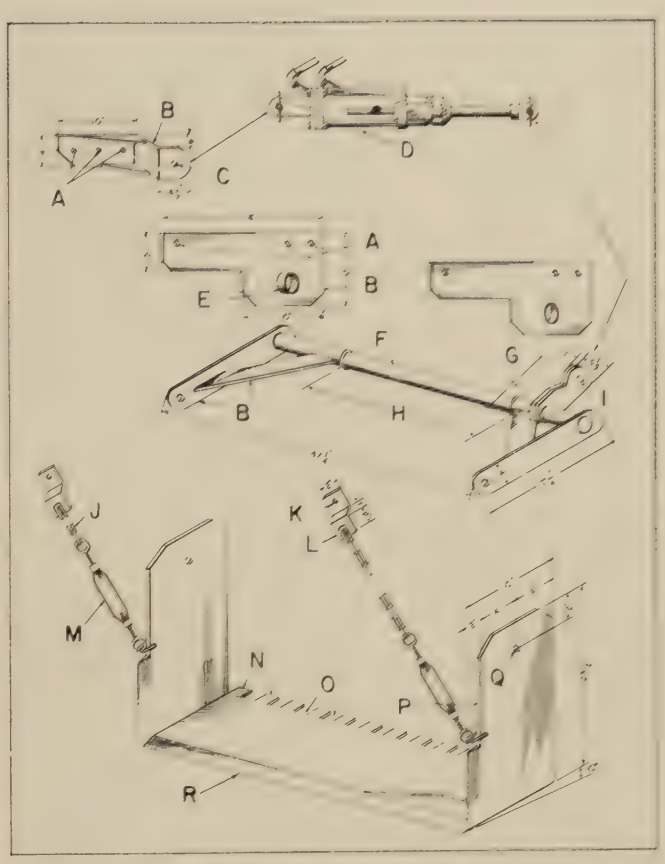

FIGURE 65. – *Construction details of lifter.*

Courtesy, North Dakota State Forestry Department

A. *Holes (5/8 in.) for bolts to tractor*

B. *Material (5/8 in.)*

C. *Hole (1 in.) to receive pump*

D. *Standard John Deere pump*

E. *Sleeve to receive 2 1/2 in. shaft*

F. *Cold rolled steel shaft (2 1/2 in.)*

G. *Stock (1 inch) made by welding two 1/2 in. plates*

H. *Distance of keeper rings depends on tractor width*

I. *Hole to receive 1 in. pump pin*

J. *Chain (3/8 in.)*

K. *Hole (5/8 in.)*

L. *Material (1/2 in.)*

M. *Turnbuckle (5/8 in.)*

N. *Teeth (3/8 × 2 in.)*

O. *Space (7/8 in.)*

P. *Material (3/4 in.)*

Q. *Hole (1 in.)*

R. *The 2 in. cutting edge was taken from a road maintainer blade (road grader).*

FIGURE 67. – *Construction details for rear-mounted lifter.*

Courtesy, Forestry Department, Michigan State University

I *Top view*

II *Front view*

III *Side view*

1. *Car spring leaf* ($1/4 \times 1\ 3/4 \times 18$ *in.*)
2. *Plate shield* ($1/8 \times 16 \times 16$ *in.*)
3. *Tractor hitch* ($1 \times 3 \times 42$ *in.*)
4. *Welder brace* ($1/2 \times 4 \times 9\ 1/2$ *in.*)
5. *T-iron sprocket/brace* ($3/8 \times 1\ 1/2 \times 15$ *in.*)
6. *Iron sprocket/brace* ($3/8 \times 1\ 1/2 \times 12$ *in.*)
7. *Coulter* (*16 in. with* $1/2$ *in. diam. axle*)
8. *Iron pipe* ($2\ 1/2$ *in. outside diam.* $\times$ *28 in.*)
9. *Grader blade* (*8 in.*)
10. *Plow bolts* ($1/2$ *in. diam.*) *with nuts at bottom of blade*

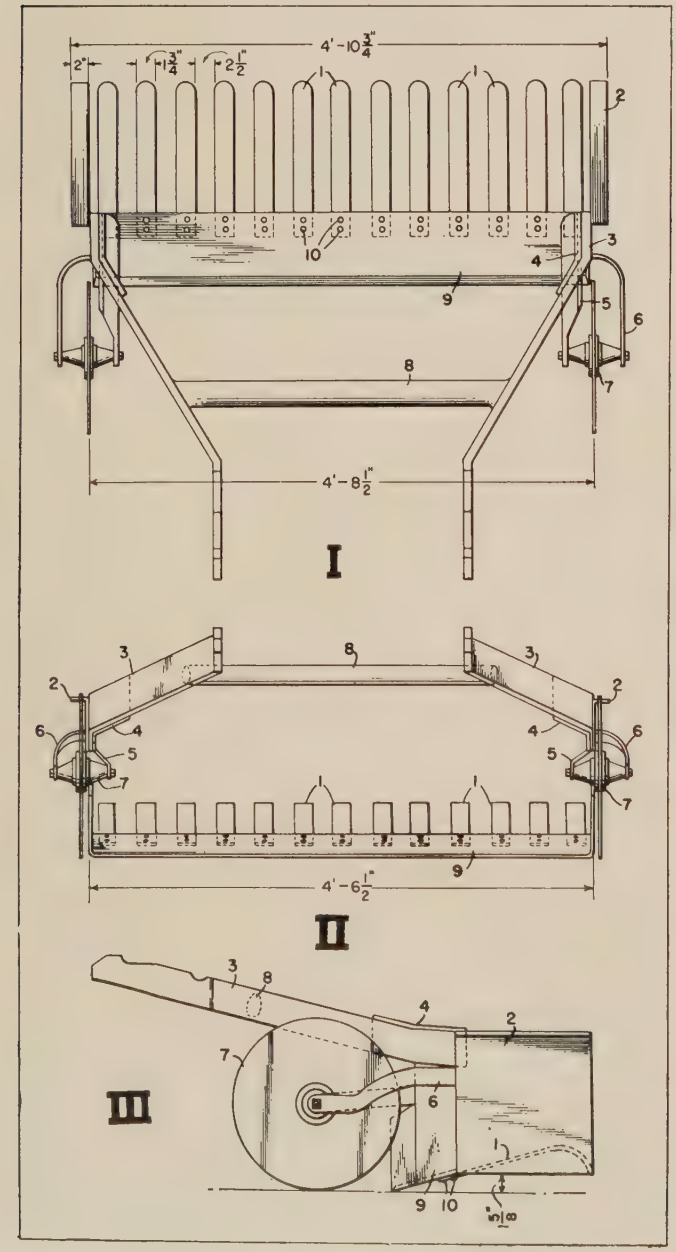

they ship it bed-run with little or no attention to actual quantities. When it is necessary to determine total quantity, they weigh a given number of trees (1,000 or 10,000); this weight is then used as a gauge for quantity in filling the order. But other nurseries must grade their stock, discard substandard plants, and obtain an accurate count.

Where grading and counting are required, the work should be done in a building so the trees are protected from sun and wind. Such work is greatly expedited if a grading table with a conveyor belt is used to carry the trees from the people doing the grading to the packers.

The grading table shown in Figure 69 was developed at state nurseries in New York and has been duplicated elsewhere, often modified in length, width, or other details to fit local conditions. The belt has numbered spaces painted on its surface, each number a different color, to aid the graders in their work. At the New Jersey State nursery, the table belt was operated at

FIGURE 68. – *One-row hardwood lifter and its construction details.*

Courtesy, Institute of Paper Chemistry

A. *Pipe* (2 *in.*)
B. *Coulter* (18 *in.*)

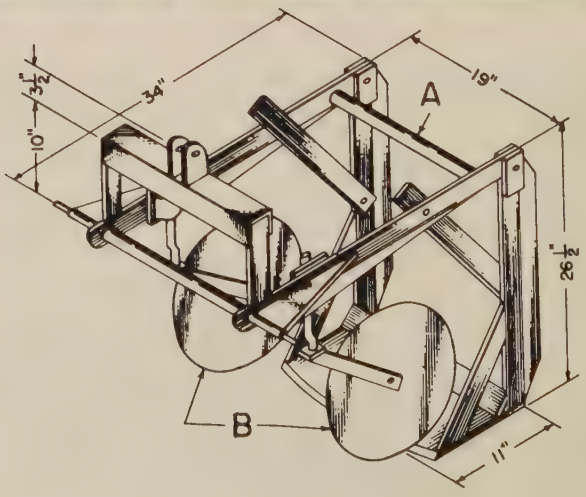

FIGURE 69. – *Grading table. Note that each number occurs 5 times on each side of each belt section. Each belt has 3 sections. Numbers and spaces are so arranged that each section when full contains 100 trees - 50 on each side. A complete revolution of the belt produces 300 trees in 6 bunches of 50 trees each, using 2 trees per number. More trees can be used per number to increase output.*

Courtesy, New York State Department of Forests and Waters

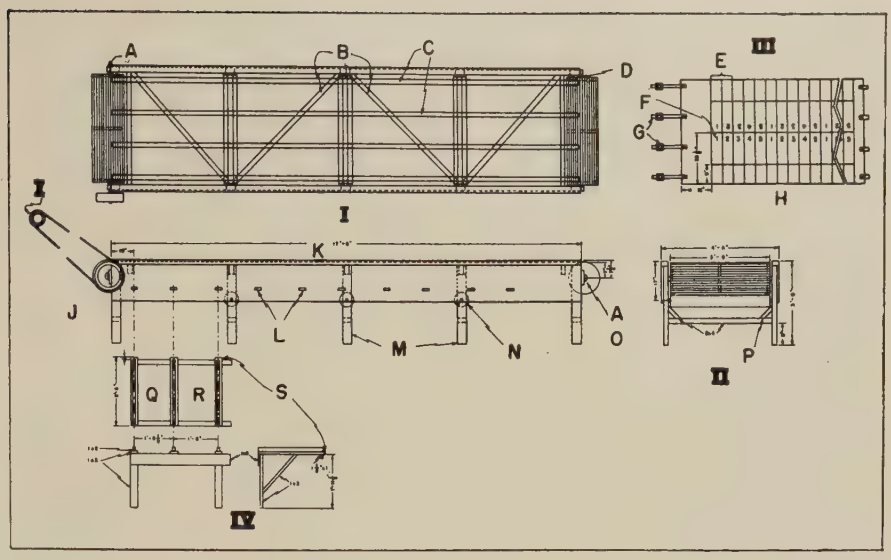

A. *Brozoli bearings* ($1^1/_4$ *in.*)
B. *Cross members* (2×4)
C. *Longitudinals* (1×2) *spaced* 3 *in. from sides,* 13 *in. in center – 4 in all.*
D. *Clearance* (*1 in.*)
E. *Space* (*10 in*) *between wood ribs on inside of belt*
F. *Stencilled 2 in. numbers*
G. *Straps and buckles*
H. *Three platform aprons* (45×159 *in.*)
I. *Motor to pulleys to overhead shaft*
J. *V-pulleys from 20-1 reduction gear or overhead shafts and belting for reducing from motor to table*
K. *Belt travel: 60 seconds per revolution*
L. *Holes for box racks*
M. *Legs* (2×4)
N. *Three rollers* (*4 to 6 in.*)
O. *Shaft* ($1^1/_4$ *in.*) *or pipe* (*1 in.*)
P. *Braces on end legs only*
Q. *Box. Box size should be* $16 \times 27 \times 8$ *in. high outside.*
R. *Man stands here. 5 men to each side*
S. *Ends of* 1×3 *fit into holes in sides of table*

a speed of 1 revolution per 59 seconds, with 5 persons on each side placing 2 trees in their assigned spaces. With such an organization, it delivered 300 trees per minute to the packers who tied them into bundles and packed the bundles into boxes or bales for shipment.

A nursery of the State University of Michigan found it advantageous to have each grader count a full bundle of 50, fasten it with a rubber band, and place it on the belt that took it to the packer. The organization it found best is shown in Figure 70. Ten graders, three packers, and one clerk achieved an output of 120,000 to 175,000 trees per day with this organization.

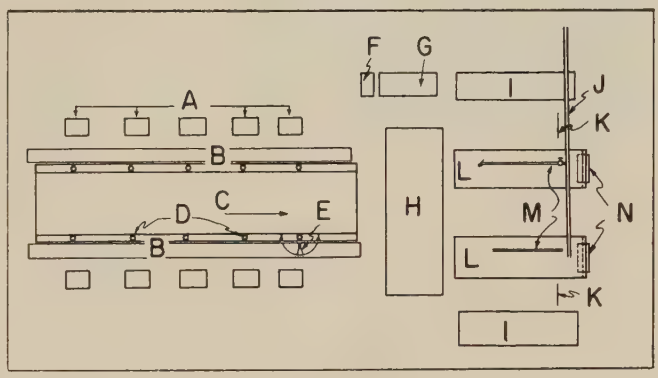

FIGURE 70. – *Suggested organization for counting and packing.*

Courtesy, Forestry Department, Michigan State University

A. *Movable stools*
B. *Conveyor*
C. *Grading table*
D. *Cone mounts*
E. *Cone*
F. *File*
G. *Clerks' desk*
H. *Table for trees*
I. *Moss tank*
J. *Overhead pipe*
K. *Shipping ticket rack hung from ceiling*
L. *Packing table*
M. *Hose suspended from ceiling to dampen roots*
N. *Rolls of paper under table*

BUNDLE TYING PRIOR TO BALING

For various reasons, some nurseries tie the trees into bundles of 50 or 100, or other convenient unit, before packing them into a large bale. To do this by hand has proved costly, because hand-tying is too slow and the maintenance of tying machines is sometimes a problem.

FIGURE 71. – *Device to aid in placing a rubber band around a bundle of seedlings.*

Courtesy, Alabama Polytechnic Institute

FIGURE 72. – A. *Tape dispenser ready for next bundle.* B. *Taped bundle ready for packing.*

Courtesy, Virginia State Forestry Department

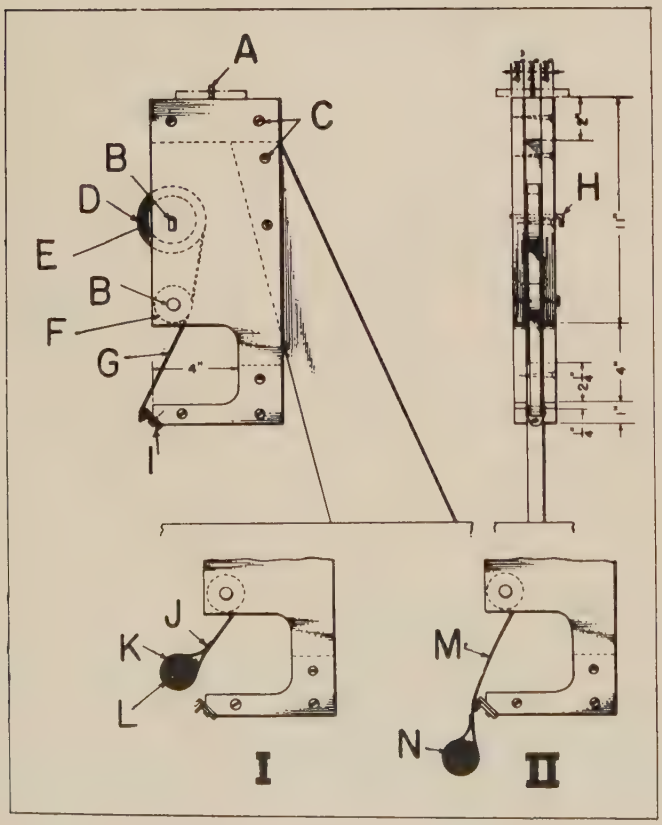

FIGURE 73. – *Construction details of tape dispenser.*

Courtesy, Virginia State Forestry Department

I *Tying position*

II *Cutting position*

A. *Pin (1/4 in.) for spare 3-inch wheel and roll of tape*

B. *Pin (1/4 in.)*

C. *Wood screws (8 × 1 1/4 in.)*

D. *Roll of tape*

E. *Wood wheel (3 in. diameter) cut from 3/4 in. pine*

F. *Wood wheel (1 1/2 in. diameter) ditto*

G. *Glue side*

H. *Removable pin*

I. *Two cutters, one over the other*

J. *Glue to glue*

K. *Tape*

L. *50 seedlings*

M. *Tape left ready for next bundle*

N. *Bundle*

FIGURE 74. – *Bales of seedlings ready for shipment. The nursery name, and instructions for watering and storage are printed on the paper wrapper.*

Courtesy, Georgia Forestry Department

FIGURE 75. – *Bale of pine trees after dropping by free fall from an airplane. The bale rolled overground and smashed into a rock but the trees were undamaged.*

Courtesy, Ontario Department of Lands and Forests

The state nurseries in Alabama found that rubber bands of a size selected to accommodate a given size of bundle were satisfactory but slow and difficult to apply. To speed the work, they made the device pictured in Figure 71. This device is nothing more than a sheet of metal formed into a funnel and fastened to a horizontal support. A quantity of rubber bands is placed onto the holder in advance of packing. The roots of the bundle of trees are inserted into the funnel and a band pulled over it and onto the bundle. Rubber bands of different colors are sometimes used as a code to designate species, age class, or other such diversities.

The state nursery in Virginia prefers to use tape instead of rubber bands. The tape used is $^3/_8$-inch pressure-sensitive cellophane which is commercially available in 60-yard rolls in any of six colors. With the device shown in Figures 72 and 73, an experienced workman can fasten bundles at the rate of about 10 per minute.

BALING

All manner of shipment systems, such as wooden crates, paper boxes, or bulk packing on the bed of a truck, are used. Each system fits local conditions very well, and need not be discussed here. But for bulk shipments that must withstand the rigors of public transportation systems, storage, and rehandling, the round bale made with wet moss and waterproof paper (Figure 74) has been found cheaper and superior to the others.

The Ontario Department of Lands and Forests has demonstrated that bales of trees can be delivered satisfactorily by free fall from an airplane. The bale pictured in Figure 75 bounced and tumbled about 30 feet between impact and stopping place without significant damage to the trees. Directions for preparing such bales follow:

Equipment

1. Tank or trough for soaking sphagnum moss or substitute.
2. Fork for handling wet moss.
3. Wooden or reinforced hardware-cloth screen for draining excess water from moss.
4. For each baler, a table at least 4 feet long × 2½ feet wide, of convenient height, with 10- or 12-inch side supports.
5. For each baler, a strapping machine or wire-tying machine using $^3/_8$-inch strap or No. 12 wire. (Despite the cost, it is cheaper to have one or two extra machines on hand than to incur a breakdown in packing through the failure of one.)

Material per bale

1. Two wooden slats, 1×2×24 inches. (For very tall seedlings, 36-inch slats.)
2. One waterproof wrapper 6×2 feet (for very tall seedlings, 6×3 feet), of 7-ounce burlap backed with asphalt and kraft paper, or of heavy waterproof crepe paper reinforced with sisal fibres. (The essentials are (*a*) sufficient toughness to stand packing and shipping; and (*b*) resistance to water sufficient to keep bale from drying out and, if bales are shipped by express, to meet common-carrier's requirements

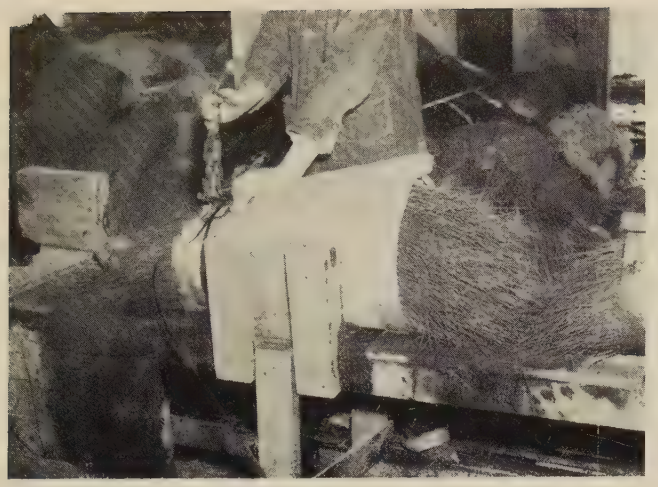

FIGURE 76. – *Metal band being tightened around newly packed bale of trees. Second strap unit will be placed around the other end of the bale.*

Courtesy, Forest Service, U.S.D.A.

about avoiding injury to other merchandise. Some nurseries print the nursery name and instructions for watering. It is also feasible to print tree planting instructions on waterproof paper and include a copy in the bale where it will be found by the planter when he opens it.)

3. Supply of sphagnum moss.
4. Two $^3/_8$-inch by approximately 5-foot metal straps, or equivalent wires, to fit make of strapping machine or wire-tying machine used.
5. Two fastening seals.

Baling instructions

1. Lay two straps across the table, about 18 inches apart. (The distance apart depends on the size of the seedlings and the way they go together in the bale, as explained in 5 and 10, following.)
2. Lay one slat at right angles across the straps.
3. Lay a wrapper, with its long dimension across the table, on top of the straps and slat.
4. Across almost the full width of the wrapper spread a layer of drained or wrung-out sphagnum moss 18 to 24 inches wide from front to back, and thick enough (2 ½ to 3 inches) to protect the seedlings.
5. On the layer of moss place loose or bundled seedlings with the sparser lower parts of their root systems overlapping the centerline of the wrapper and their root collars well inside the edges of the wrapper, but at least the tips of their needles projecting well beyond the wrapper. The seedling tops, however, should not project so far beyond the wrapper as to flop loose or to be injured in handling the bale. The layer of seedlings should not be more than 3 to 4 inches thick. The exact position of the seedlings depends mainly on their size. On each side of the layer the root collars should be about equally distant from the edge of the wrapper.
6. Spread 2 to 3 inches of moss over the roots and far enough up to the stems to cover the root collars and to maintain the thickness of the bale to a point slightly outside the strap on either side. The moss must extend beyond the seedlings, both front and back, to meet the first layer of moss.
7. Repeat steps 5 and 6 until the bale is the desired size, ending with a top layer of moss 2 ½ to 3 inches thick. (Numerous thin layers of seedlings and moss require little more labor than fewer, thicker layers, and make a better bale, especially for long shipment or several days' storage.) Bales are commonly made to weigh about 60 pounds apiece, before supplementary watering, letting the number of seedlings per bale vary according to the size of the stock. With a little practice, checked by weighing of bales, most bales can be made remarkably uniform.
8. Make sure that there is everywhere at least a 2 ½- to 3-inch layer of moss between the wrapper and the nearest seedling roots; bring the two ends of the wrapper neatly together in a double layer above the top of the bale.
9. Take the second slat and roll both ends of the wrapper jointly around it until the wrapper has pulled the bale together as tightly as can be managed conveniently by hand.
10. Bring the straps around the bale; tighten each firmly but not crushingly with the strapping machine (Figure 76); seal and cut off. The straps must go around the bale fairly near the edges of the wrapper and somewhat above the root collars of the seedlings (less far, but still definitely above, in the case of longleaf pine) in such a way that rough handling cannot cause the seedlings or straps to loosen or shift, or seedlings or moss to fall out.
11. The finished bales are kept on their sides but may be stood on end, temporarily, for watering and draining before or during shipment or storage.

Soil Management

No two nurseries start with identical soils nor make exactly equal demands upon these soils. Thus, no course of soil management can be uniformly prescribed. Yet, general principles apply to all, and the following recommendations from the U.S. Department of Agriculture's Agriculture Monograph No. 18, could be generally adapted in various regions after suitable local trials.

1. Erosion must be controlled. Mechanical packing, working of heavy soils when very wet, mixing of heavy subsoil into surface soil, excessive watering, and other procedures which may injure the soil physically should be avoided, or reduced in every possible way.
2. Soil organic matter should be built up to and maintained at a 1.5 to 2.0 percent level by the use of green manure crops, composts, or organic soil amendments. Soils very low in organic matter may require annual or alternate-year applications

of 10, 20, or even 40 tons of compost or organic supplements per acre.

3. Fertilizers and other substances added to the soil preferably should be chosen to produce and maintain a *p*H concentration of slightly above 5.0, but not above 6.0.
4. Unless they result in succulent or oversize stock incapable of good plantation survival, additions of nutrient elements to the nursery soil should at least equal and possibly greatly exceed the average annual quantities required locally for agricultural crops. Phosphorus and nitrogen are especially likely to be required.
5. Any nutrient element added in inorganic form before sowing pines should be applied cautiously in small to moderate quantities. Instead, either periodic additions during the growing season or moderate to heavy applications to the green manure crops may be preferable. Such additions might also be a means of supplementing the additions made before sowing.
6. Applications of lime should be avoided unless there is definite evidence of need for them. If such applications are needed, they should be made before green manure crops rather than before pines. Large applications of easily soluble inorganic nitrogen carriers, such as sodium nitrate, or of easily decomposed organic nitrogen carriers, such as cottonseed meal or dried blood, should not be made when or just before sowing pines. Also, they should not be made a short time before lifting.
7. In preference to being left bare for periods of some months, nursery soil should be sown to cover and catch crops that reduce erosion, keep down weeds, and prevent deterioration of soil structure and leaching of nutrients. Even a cover of weeds may reduce erosion and leaching and return a net benefit if disked in before producing seed or rhizomes.
8. Green manure, cover, and catch crops may have to be selected for their resistance to nematodes. During the winter and spring and until about July, such crops must be watched closely as a source of cutworm outbreaks.
9. Green manure, cover, and catch crops must be plowed in long enough before pines are sown to permit decomposition. One month is about the minimum safe period. Much longer is necessary with very heavy crops.
10. Large applications of organic matter, such as straw, sawdust, or even nonleguminous green manure crops, should not be turned in before a pine seedling crop without adding enough nutrients, especially nitrogen, to supply the micro-organisms that decompose cellulose.
11. Fertilizers should not be incorporated in compost to the extent of more than about 4 percent by weight of nutrient salts, based on airdry weight of the compost material.
12. Materials and practices deserving of local trial are as follows: Previously little-used raw materials (especially sawdust) for composts and organic supplements; slowly soluble carriers of nutrient elements, especially for green manure crops or for application before sowing pines; application of inorganic nutrient carriers periodically during the growing season but with care to wash them off the foliage promptly if applied in liquid form; moderate late-season applications of potassium (which seem to improve survival); building up soil organic matter by applying sawdust and nitrogen to legume green manure crops; and leaving late-summer green manure crops on the ground as a mulch over winter instead of turning them under in the fall.
13. If seedling development is poor and no mycorrhiza can be seen on the roots, inoculation of the beds with mycorrhizal soil or cultures should be tried as a means of improvement.
14. The final proof of the effectiveness of any nursery soil treatment, over and above its cost and its visible effect on the soil, is the plantation behavior of the seedlings it produces. The size and appearance of seedlings are not reliable evidence of their quality. Any drastic change in fertilizer treatment requires planting of the treated seedlings to verify their capacity for high initial survival.

Hardwood Production

In general, the techniques and machines described in this manual are equally adapted to the production of hardwoods or conifers. For example, the beds for either type of stock are generally made in the same manner and size. Seeding machines for conifers are satisfactory for some hardwood seeds and can be modified to serve for others. The transplanting equipment shown will serve for planting hardwood cuttings, as well as for rooted seedlings of either hardwoods or conifers. Similarly the diggers and the packing equipment is the same for either class of stock.

One important difference, which must be observed until local experimentation has shown otherwise, is that hardwoods are more susceptible to serious damage from the application of oil or chemicals to control weeds. Hardwood weeding can be expedited if the bed is sown with the seed in bands or rows and then cultivated with the powered cultivator shown in Figure 58 on page 73.

The diagrams for this article have been reproduced in as much detail as practicable but cannot be definitive. Readers requiring working drawings should refer to the author. The first part of the manual was printed in the last number of Unasylva *and is now available as one reprint.*

NOTE: 1 inch = 2.54 centimeters; 1 foot = 30.48 centimeters; 1 square foot = 0.0929 square meter; 1 acre = 0.4 hectare; 1 gallon = 4.54 liters; 1 pound = 0.45 kilogram.

The Work of FAO

FAO/IUFRO Committee on Bibliography

Periodic accounts have appeared in *Unasylva* of the work of the Committee on Bibliography sponsored jointly by FAO and the International Union of Forest Research Organizations (IUFRO).[1] Professor E. Saari of Finland continues as Chairman of the Committee, which held its eleventh session in Spain (Lourizan and Madrid) in September 1959.

The main task taken up by the Committee when it was first established in 1949 after the Third World Forestry Congress, was the elaboration of a world system of classification for forestry literature, and its translation into the working languages of FAO and IUFRO (English, French, Spanish, and German). This first objective has now been attained. The basic version in English of the Oxford Decimal Classification (ODC) was unanimously accepted by IUFRO in 1953 and by the Fourth World Forestry Congress, 1954, and was also approved by the FAO Conference. It has been formally incorporated into the Universal Decimal Classification System of the International Federation of Documentation, The Hague. Authorized translations have been published in German (1957) and in Spanish (1959), while the French authorized version is due to be published in 1960. Translations have also been made into a number of other languages (Finnish, Dutch, Romanian, Italian, Czech, Turkish), but the committee assumes no formal responsibility for the correctness of these. A continuing responsibility remains, however, in regard to emendations to the ODC, primarily so as to cater for the normal development of the forestry sciences in scope and diversification.

The procedure for this has been outlined in *Unasylva* and amendments have been published in 1957 and 1959. A third set of amendments, as examined and discussed at the committee's eleventh session, will be published in a forthcoming number of *Unasylva* and in *Forestry Abstracts*. The German text of these amendments is to appear in leading Austrian, German and Swiss forestry periodicals.

At the request of FAO's European Forestry Commission, a system of classifying and cataloguing forestry film material on the basis of the ODC has been elaborated.

Multilingual forest terminology

The second major task to be undertaken by the Joint Committee has been the compilation of a multilingual forest terminology. The basis of procedure and the mechanics of preparation have also been described in *Unasylva*. (Reprints are available on request.) By the close of 1959, practically all identical or closely similar terms and definitions in use in the English language groups of countries, (the United States of America and the Commonwealth) had been discussed and placed on cards for distribution free of cost, to national terminology committees: 250 copies of each card have been prepared, but at present some 80 sets only are being regularly distributed and a circular letter has been sent by the committee's Chairman to all known national terminology committees, as well as to forest services, reminding them of the service available. The letter reads as follows:

"The collaboration between the Commonwealth Forestry Bureau, Oxford, and the Society of American Foresters, Washington, referred to on page 165 of the article entitled 'Multilingual Forest Terminology,' appearing in *Unasylva*, Volume 9, Number 4, 1955, was resumed in autumn 1959, and although progress in this complicated task will necessarily be slow, nearly 200 cards bearing agreed terms and definitions in English have already been issued to national terminology committees that have requested them. Other such committees, as and when constituted, are invited to apply *direct* to Mr. Ford Robertson, Director, Commonwealth Forestry Bureau, South Parks Road, Oxford, for the number of sets they need. If they have not already done so, they should inform both him and the Secretary, Joint FAO/IUFRO Committee on Bibliography, Forestry and Forest Products Division, FAO, Viale delle Terme di Caracalla, Rome, of their full designation and postal address.

Requests for these cards may please be limited to the number of sets calculated to effect their purpose (*vide* para. 3.6 to 3.7 of the above cited article in *Unasylva*). It is expected that each Terminology Committee, after making its corresponding cards in the local languages, will want to file:

English cards
By AN - Alphabetically by terms
Own cards
By AN - Alphabetically by terms."

The FAO/IUFRO Committee has agreed that national terminology committees must accept full responsibility for their own definitions, and that the Commonwealth Forestry Bureau should be approached only in cases where either there is some doubt about the meaning of the English definition, or there exist substantial differences between the meaning of a term in English and its agreed equivalent in the other language.

In order to expedite this unspectacular but essential work, and enable a useful influence to be exercised on the nomenclature of the fast-developing forestry sciences, full advantage will be taken of terms and definitions

[1] See Vol. 9, No. 4, 1955; Vol. 10, No. 4, 1956; Vol. 11, No. 3, 1957; Vol. 13, No. 2, 1959.

established by international bodies working in specialized fields of forestry or in other related fields.

The Committee proposes to produce an initial sample list of terms and definitions, as ready for the English-speaking group, for submission to the Twelfth IUFRO Congress to be held in Vienna in September 1961. Language-group committees have been set up for French, German, and Spanish. Brazil expressed interest in participating in a Portuguese terminology based on the Committee's work and there are plans for the formation of a Scandinavian group whose aim it would be "to promote the acceptance of concepts as defined in the multilingual terminology".

World list of forestry literature

Another project in which the Committee is involved is the preparation of a *World List of Periodicals and Serials of Interest to Forestry*, to be issued by FAO. It is expected that the information so far collected can be published in loose-leaf form in the middle of 1960. Supplementary material will be published from time to time.

Classification and cataloguing of forestry film material

The form of catalogue recommended by the Joint FAO/IUFRO Committee on Bibliography and approved by the European Forestry Commission's Tenth Session is a card system based on the ODC and maintained separately from any other catalogue, embodying the following features. The cards should be filed at least:

1. according to the ODC coding for their subject matter,
2. according to the ODC coding for the country producing the film, but many centers may, in addition, want:
3. to file according to physical locality also, i.e., according to the country in which the film is taken, and
4. to subdivide this by subject matter.

It is suggested that cards prepared for filing under (1) and (2) above be white and cards under (3) and (4) tinted, and that due regard be paid to the precepts embodied in the Introduction to the ODC, especially Section 5.

The ODC coding in the top left-hand corner consists, in the example given, of three sets of subheads: 23, regeneration and formation of stands; 37, transport; (497.1) the auxiliary number indicating the physical locality filmed, here in Yugoslavia.

The ODC coding in the top right-hand corner is that of the producer or filming country (here Germany) preceded by the "form" number for films (084.122).

An example of the information that should be available on a standard 125 × 75 millimeters (5 × 3 inches) card for a film made, for instance, in Yugoslavia by a German producing agency on the general subject of forest regeneration and the transport problems involved, is given here:

23: 37: (497.1) (084.122) (43)

Title: (in original language, with translation in either English, French, German or Spanish)

Synopsis: (in original language, with translation on back of card if space on front does not allow for this).

Producer:

Distributor:

Date: *Length* (in min.) *Width* (in mm.)

Language versions: *Sound* *Color*

Price (local currency): (*a*) for purchase (*b*) for hire

Audience: Schools - General - Technical

Clearance for use on television:

Wood Preservation

Preservation techniques have become established practices for extending the useful life of wood and wood products, and their use is expanding. The reasons advanced for this trend are the relative scarcity of naturally durable timbers, rising labor costs which favor the use of materials with a long-service life, the decreasing cost of preservatives, and the development of improved treatment methods and equipment. Closer international co-operation is required to secure the spread of sound developments.

These are some of the conclusions reached by the *Ad hoc* Group of Experts on Wood Preservation which was called together at Rome 1-4 December 1959. The meeting was arranged to give guidance to FAO on the extent to which the Organization could usefully promote international co-operation on wood preservation matters and to recommend a program of action.

The first such meeting in this field arranged by FAO, it was attended by experts invited from Austria, Belgium, the Federal Republic of Germany, France, India, Sweden, Thailand and the United Kingdom, and an observer was present from Indonesia. Written contributions were received also from Argentina, Australia, Chile, Malaya, New Zealand, Philippines and the United States of America. Mr. F. Becker (Germany) was elected Chairman of the meeting and Mr. A. Purushotham (India) nominated as Rapporteur.

The main contributions of wood preservation are:

1. By utilizing preservative-treated secondary or non-durable timbers, the drain on primary durable timber species can be reduced. Also these premium timbers can be reserved for export markets to gain foreign exchange credits. Similarly preservative treatment of imported timbers serves to extend their service life, thus reducing the drain of foreign credits by an importing country.

2. Utilization of a larger number of indigenous timber species can make the opening-up of new areas of forests an economical proposition, and permit improved forest management of forests already under exploitation.
3. Making timber last longer is equivalent to increasing timber supplies.
4. The proper use of wood preservative techniques in housing can in most areas and particularly in tropical areas help in improving housing standards and providing increased service life to wood structures.

Three items received particular consideration by the experts assembled at Rome - international problems in wood preservation, its use in housing and other construction, and special problems of wood preservation in tropical areas and, in relation to these, a program of work was suggested and individuals and sub-groups designated to carry out a number of tasks. Unification of nomenclature and definitions was one of the tasks singled out. Another agreed on was laboratory tests with fungi and insects. For some other laboratory as well as field tests, a list of priorities was established.

It was recognized that there is great scope for increasing the service life of wood in housing and other construction. The nonavailability of treated wood of the type needed and at the right time probably has been the biggest obstacle to its wide use in housing.

The great variation in local conditions, both with regard to hazards and the availability of naturally durable woods, make it difficult to offer any general recommendations, but full advantage should be taken of the sound building construction practices recommended in instruction manuals prepared in some countries. In areas with a tropical climate, all nondurable wood species should receive preservative treatment. A compilation of information relative to the behavior of treated timber in houses and the methods for curative treating *in situ* was needed; this was already provided for in the program for concerted action in the field of housing drawn up for the United Nations and its Specialized Agencies.

It was decided that a beginning should be made by preparing a short general leaflet for distribution in the countries of Africa, Asia and Latin America, covering the principal hazards to which timber was exposed when used in tropical and subtropical areas, the protective measures required, and referring to proper design and construction. A publication dealing with preservation aspects of timber used in rural construction was desirable, and in due course a specification manual on the treatment of timber for housing.

Problems of wood preservation in tropical areas in general do not differ in nature from those encountered in temperate zones. Differences in the severity of exposure, in the amount of knowledge available, in economic and other operating conditions may, however, require different solutions. The problems should be approached from the standpoint of (*a*) improvement of treating facilities, and (*b*) expansion of research activities. A methodical approach was mapped out towards the better use of naturally durable wood as well as of wood which requires preservative treatment. In underdeveloped areas it is the initial rise in costs of the processed timber that is holding up the spread of wood seasoning and wood preservation on a satisfactory scale. However, processed timber can, for example, be made available to the public through co-operative societies or community development organizations. The largest consumptions of timber in the underdeveloped areas would be for buildings, and consequently wood preservation should pay good dividends both in the public and private sectors.

Although in many countries government departments were already aware of the advantages to be gained by the pursuit of a policy employing efficient prophylactic treatment of timber, nevertheless there should be a more widespread aim to make known the advantages of using effectively preserved timber in those cases where treatment favours the interests of consumers.

In discussing the program and organization of FAO's work, the expert group noted that no mechanism for worldwide co-operation in the field of wood preservation existed at present. It therefore strongly recommended that the work initiated by this meeting should be continued and that a permanent working party on wood preservation should be established to stimulate and co-ordinate development in wood preservation on a world basis.

Asia-Pacific Forestry Commission

Asia's need for wood products — particularly for paper in its various forms — will increase enormously over the next 15 years according to estimates given to delegates at the Asia-Pacific Forestry Commission's fifth session held in New Delhi, 12-18 February 1960. Sixteen nations [2] of the FAO's Regional Commission were represented at this session, at which the first draft of a regional appraisal of wood resources and requirements, prepared by FAO in co-operation with the United Nations Economic Commission for Asia and the Far East (ECAFE), was released for the first time.

Taking present consumption and demand as a base, and projecting on the basis of increasing population and income and improving economic and literacy standards, the study shows that even at a most conservative estimate, the region's annual requirements for industrial wood products will roughly double by 1975. This will mean that there will be a yearly need for an additional 75 million cubic meters of industrial wood in various

[2] Australia, Burma, Cambodia, France, India, Indonesia, Japan, Korea, Malaya, Netherlands, New Zealand, Pakistan, Philippines, Thailand, United Kingdom, United States of America. Observers were also present from the International Labour Organisation, the World Meteorological Organization, and the International Organization for Standardization.

forms. If production increases as now contemplated, this would mean a shortage of 20 million cubic meters, as against a shortage at present of about 3 million cubic meters, imported from outside the region.

These figures do not take into consideration Mainland China nor the staggering gap between demand and supply of fuelwood in the region, particularly in India and Pakistan. Figures given in the study show that, in 1975, fuelwood supplies will fall short of needs by 40 million cubic meters, even without provision for replacing cow dung by wood as a source of domestic fuel. The use of cow dung as a fuel is disastrous in terms of loss of soil fertility, to the extent that it is often said to mean that meals are cooked by burning food. In India, for example, it is calculated that some 200 million tons dry weight of cow dung are burned every year, or about half a ton per person. If this manure could be used as fertilizer for agriculture, India's annual food output could be increased by 7 million tons of food grains. Yet, if only 30 percent of this burnt cow dung were to be preserved for agricultural purposes, another 150 million tons of fuelwood would have to be found in 1975. Supplies would have to be trebled if the burning of dung were to cease altogether.

One of the most striking features of the study is the orders of magnitude revealed. Far East countries consume far greater amounts of wood and wood products than earlier estimates had indicated. Nevertheless, they still appear to consume only 87 million cubic meters of industrial wood and 262 million cubic meters of fuelwood annually.

The study makes a powerful case for increased intra-regional trade in wood and wood products. Traditionally, in the past, countries of the region have exported certain wood products outside the region and have in turn imported converted products. But with an increasing economic growth, and the need for more and more wood products other than hard timbers in the region, this pattern is likely to change. For instance, continental Southeast Asia (Burma, Cambodia, Malaya, Laos, Singapore, Thailand and Viet-Nam), which now has a small deficit in industrial wood, should by 1975 have an annual surplus of about 3.6 million cubic meters. Similarly, insular Southeast Asia (Brunei, Indonesia, New Guinea, North Borneo, the Philippines, Sarawak) should increase their annual surplus of 2 million cubic meters to one of about 9.4 millions. However, South and East Asia, (Ceylon, India, Nepal, Pakistan, Taiwan, Hong Kong, Japan, Korea) which now has a total deficit of only one million cubic meters, will by 1975 have a deficit of about 30 millions, even assuming a reasonable rate of progress in forest development. There is thus an opportunity for considerable intra-regional exchange.

The most rapid rise in wood requirements is likely to be in the area of pulp and paper. Demand for paper and paper products is expected to rise during the next 15 years by 170 percent in Oceania, 310 percent in south Asia, and 280 percent in the rest of the region. This means that additional raw material needs will be about 19 million cubic meters by 1965, and about 32 million cubic meters by 1975. The region has potentially enough paper-making fibre, and the obstacles to expansion are economic rather than technical. At an average rate of $ 130 investment per cubic meter, new capital required will be about $ 2,500 million by 1965, and $ 4,200 million by 1975.

These figures may seem astronomical, but they compare very favorably with the sums that will have to be spent on purchases from abroad if domestic production is not stepped up. If campaigns to wipe out illiteracy are to gather force, if foodstuffs are to be preserved through proper packaging, if urgently needed industrialization is to go ahead, more and more paper and paper products will be required. Unless steps are taken to provide these from the region's own forest resources, vast amounts of foreign exchange will be expended, to the detriment of other urgent programs. FAO, again with ECAFE and the United Nations Bureau of Technical Assistance Operations, is organizing a conference on Pulp and Paper Development in the Far East in Tokyo later this year, and it is hoped that solutions to some of the problems involved will be found there.

Forestry development, the study insists, must not be planned in isolation as it often now is, but in close co-ordination with agriculture and industry. The protective role of the forest must also be taken into account. In certain areas this may well transcend wood production in importance. The annual cost of soil erosion and flooding to the region runs into many thousands of millions of dollars, and much of this is due to forest destruction.

The study makes a challenge to governments. Egon Glesinger, Director of FAO's Division of Forestry and Forest Products, in presenting it to the session, expressed his belief that it will have served a useful purpose even if its only result is to bring home to governments what will attend failure to develop and implement far-sighted plans for investment in forestry and forest industries. The study will be printed later in the year and then be fully discussed at the next session of the Asia-Pacific Forestry Commission which should recommend specific action programs, covering probably:

1. gradual elimination of shifting cultivation and uncontrolled forest grazing;
2. more complete utilization of forests at present exploited and the elimination of waste in all subsequent stages of wood utilization and processing;
3. development of virgin forests;
4. establishment of intensively managed plantations of fast-growing species and the planting of trees outside the forest; raw material for long-fibred pulp should receive high priority;
5. development of forest industries and especially the establishment of pulp and paper mills;
6. rapid expansion of trade within the region, and in particular between the countries in Southeast Asia, which are well endowed with forest resources, and the countries of South Asia and East Asia which are faced with rising deficits.

Other Features of the Session

Satisfaction was expressed that national progress reports on forestry had been submitted by all member nations with only one exception. The main features of these reports are summarized in the final report of the session.

The report of the Third Session of its Teak Subcommission was approved by the Commission and its recommendations endorsed. This report is available separately.

It was noted with appreciation that the Asia-Pacific grading rules, *Hardwood Logs other than Teak*, and *Sawn Hardwood Timber* (*Non-Teak*) had been printed by FAO. The Commission also heard with pleasure that a final draft of the "Standard Nomenclature of the Exportable Timbers of the Asia-Pacific Region" had been agreed upon and could now be printed.

An *ad hoc* Working Party on Forest Working Techniques and Training of Forest Workers was convened prior to the main session, to draw up a general program of action for a permanent body eventually to be established.

The terms of reference should be "the promotion of international collaboration with regard to the training of forest workers and to working techniques in forest operations and timber transport, in order to support national efforts aimed at increasing productivity, better utilization of forest resources, prevention of accidents, and improvement in the working conditions and standards of living of forest workers".

It was decided that the International Labour Office (ILO) should be invited to collaborate in the activities of the Committees in sectors of interest to that Organization, such as vocational training and prevention of accidents among forest workers. The program of work of the Committee should cover, in order of priority, the following fields of activity:

(*a*) training forest workers, foremen and officers; accident prevention;

(*b*) hand tools, their use and maintenance;

(*c*) mechanization; technical and technological studies; testing;

(*d*) work organization.

Implementation of this program would be entrusted by the main Committee to study groups each responsible for a particular sector.

Silvicultural and forest management research

The Commission took note with appreciation that under the able guidance of their respective co-ordinators, the Subcommittee on *Pinus* and *Eucalyptus* (Mr. P. A. Daley, United Kingdom) and the Subcommittee on Lowland Tropical Rain Forests (Mr. J. Wyatt-Smith, Malaya) had produced three separate papers containing a wealth of valuable information for countries that are facing the problems of introducing and expanding their plantations of pines and eucalypts, and the management of lowland evergreen rain forests.

The most promising pine species for introduction trials appear to be:

(*a*) *Pinus merkusii*, *P. hondurensis* for wet tropical localities from plains up to 3,000 feet;

(*b*) *P. khasya*, *P. longifolia*, *P. insularis* for wet tropical and subtropical highlands;

(*c*) *P. tropicalis*, *P. cubensis*, *P. occidentalis* for moist tropical localities;

(*d*) *P. strobus* var. *chiapensis* for tropical and subtropical localities with 40 to 70 inches (1,000 to 1,750 millimeters) of rainfall.

Studies are to be initiated on other tropical conifers such as *Araucaria*, *Podocarpus*, *Agathis*, *Cupressus*, etc., that are to be found naturally in the tropics.

Forest products research

In the absence of its Chairman (Mr. Stanley A. Clarke) the report of this Committee was presented to the Commission by Mr. M. R. Jacobs of Australia. Note was taken that, in accordance with recommendations of by the previous session, work continued to be carried out correspondence among the members of the Committee. Progress, or statement of results, conclusions and suggestions were reported on the following items:

1. co-ordination of research and exchange of information;
2. problems connected with the manufacture and use of phenol resin from the bark of mangrove and other species;
3. design of timber structures in tropical countries with special reference to strength grouping, stress grading and the design of joints;
4. uniform methods of testing, strength grading and presentation of results and derivation of design data from test results;
5. methods of testing the veneer-peeling qualities of different tropical species;
6. tests for pulping qualities of tropical broadleaved species.

The Commission noted with satisfaction that a list had been compiled of the equipment and other facilities available in the laboratories of Australia, Burma, India, Malaya, New Zealand, Pakistan, the Philippines and Thailand.

Election of officers

The Commission unanimously elected Shri R. C. Soni, Inspector-General of Forests to the Government of India, as its new Chairman until its Sixth Session. Mr. E. T. Tirikatene, Minister of Forests of New Zealand, and Mr. M. Tasdique Hussain, Inspector-General of Forests of Pakistan, were elected First and Second Vice-Chairman, respectively, for the same term of office. The Commission appointed two Rapporteurs in the persons of Mr. P. A. Daley (United Kingdom) and U Tun Kyaw (Burma).

Equipment Section

Napco Crab Tractor. — Moves forward, backward or obliquely. 4-wheel drive. 4 speed fwd., 4 rev. Direction changed without shifting gears or changing transmission speed by operating forward or reverse foot pedals, 52 brake h.p. at 2,800 rpm. Weight 5,100 lb. (2,300 kg.) standard tractor drawbar 11,900 lb. (5,400 kg.). Vehicle speed: 1st gear 0 to 4 m.p.h. (6.4 km./h.), 2nd 0 to 8 m.p.h. (12.9 km./h.), 3rd 0 to 15 m.p.h. (24.1 km./h.), 4th 0 to 25 m.p.h. (40.2 km./h.). Turning radius 12 ft. to 2 in. (3.7 m.); unit dimension: wheelbase 73 in. (1.85 m.); length over-all 118 in. (3 m.); height over-all 78 in. (2 m.); width over-all 78 in.; clearance 13 in. (33 cm.).

Manufacturer: Napco Industries, Inc., Federal Motor Truck Division, Seventh Street, North Lyndale, Minneapolis 11, Minnesota, United States.

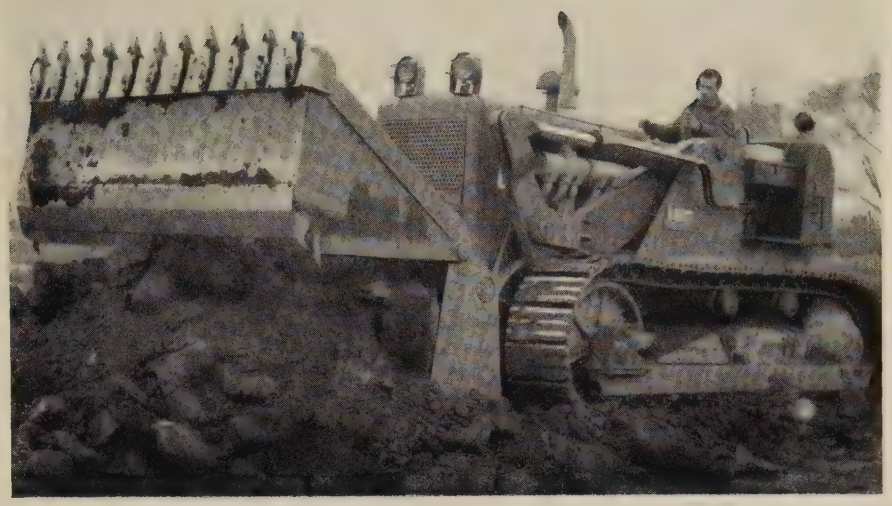

International Drott B - 20K - 3. — Crawler tractor shovel has a 124 h.p. Rolls-Royce quick-starting diesel engine weighing 19 ½ tons with bite of 3 cu. yards (2.3 m³), full reverse 6-speed transmission; each rev. speed is 20 percent faster than the same speed forward and the equipment can reverse as fast as 8.4 m.p.h. (13.5 km./h.). Drott Hydro-Spring absorbs up to 67 percent of all shocks from tractor and loader. Control lever changes from normal shovel operation into bulldozer.

Manufacturer: International Harvester Company of Great Britain Limited, Harvester House, 259, City Road, London E.C.1., England.

150 Integral Log Arch. — Mounted directly on tractor. Unit highly maneuverable, especially profitable for logging in bush areas and for selective logging. Bull hook and chokers pass through 3-roller fair-lead. Working height is 50 ¼ in. (1.28 m.) from top of horizontal roller to ground. Shipping weight approx. 365 lb. (166 kg.).

Manufacturer: John Deere Intercontinental S.A., 400, Nineteenth Street, Moline, Illinois, United States.

B - 14-1 Mobile Crane. — Self-contained unit with a working range up to 5 tons and a maximum hook height of 18 ft. (5.5 m.). Obtainable with loads up to 3 ½ tons. Powered and driven by the engine, transmission and driving axle of the International Harvester B-450 wheeled tractor, a 55 h.p. unit. The tractor transmission provides 5 fwd. speeds and 1 rev., giving speeds up to 14.7 m.p.h. (23.7 km./h.).

Manufacturer: International Harvester Co. of Great Britain Ltd., Harvester House 259, City Road, London E.C.1, England.

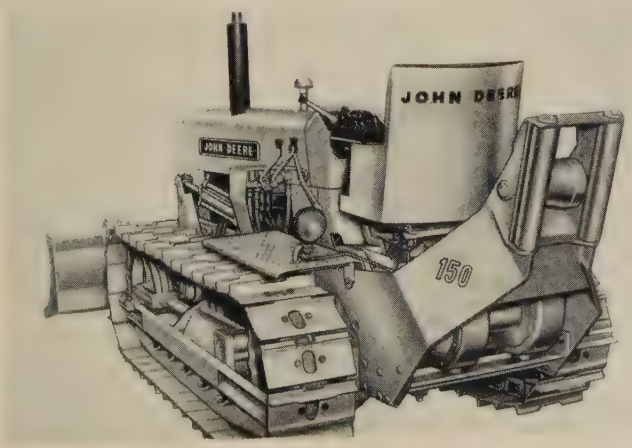

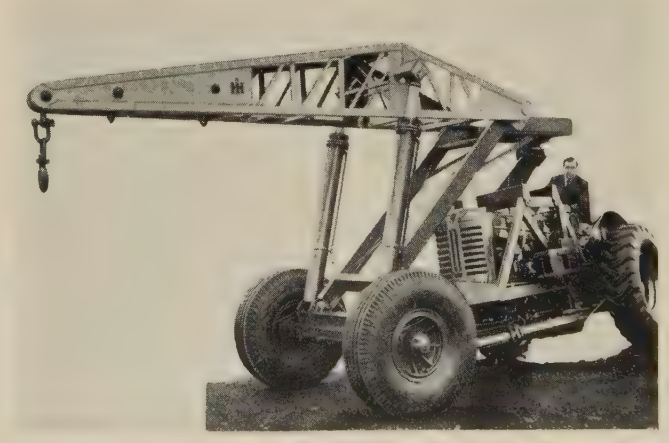

Model 310C Case Crawler Angling Dozer. — *Specifications:* Max. pull or push 1st gear 5,690 lb. (2,580 kg.). Drawbar h.p. 30; max. lift 22 in. (56 cm.); max. depth of cut 10 in. (25 cm.); blade angulation, L and R 0° and 25°. Blade 88 in. × 25 ½ in. (2.24 × 0.65 m.); width at blade (angled 25°) 80 in. (2.03 m.); width of tractor, over-all 59 in. (1.50 m.); height of tractor, over-all 63 ½ in. (1.61 m.); length, overall (blade straight) to rear of tractor 9 ft. (2.7 m.); to rear of scarifier 12 ft. 1 ½ in. (3.7 m.); length, over-all blade, angled 25°: to rear of tractor 11 ft. 2 ½ in. (3.4 m.); to rear of scarifier 14 ft. 4 in. (4.4 m.); ground clearance, at torque tube 16 in. (41 cm.), turning distance (track radius) 7 ft. (2.1 m.).

Manufacturer: J.I. Case Co., Utility Sales Division, Racine, Wisconsin, United States.

Fleco Chopper Model SS-7. — This single drum straight blade rolling chopper can be used for eradicating and controlling undesirable growth up to 6 in. (15 cm.) in diameter. The chopper weighs approx. 6,500 lb. (2,948 kg.) empty and when filled with water approx. 12,000 lb. (5,443 kg.).

Manufacturer: Fleco International, Inc. P.O. Box 820, Nassau N.P., Bahamas, W. Indies.

Brush Cutter. — *Specification:* For tractors of 40 to 60 h.p. Weight 700 kg., width of cut 1.50 m., height of cut from 0 to 18 cm. Wheels can be placed at the sides or at back of machine. Height of cut accurately controlled by screw and wheel. Fits any tractor with power take-off.

Manufacturer: Gard Père et Fils, Potelières par St-Ambroix (Gard), France.

Vermeer Pow-R Stump Cutter. — Basically a rotor of $^3/_8$ in. (95 mm.) plate fitted with hardened replaceable teeth, which revolve at about 500 rpm. Driven by belt drive from 36 h.p. gasoline engine mounted on superstructure. Rotor moved horizontally and vertically by hydraulic cylinders controlled by operator who is protected by mesh screen. Bite of approx. 10 in. (25.4 cm.) taken at each pass. Average hardwood stump of 3 ft. (91 cm.) diam., projecting 18 in. (46 cm.) out of ground can be reduced to pile of chips and hole in ground in less than half an hour.

Manufacturer: Henry R. Jahn and Son, Inc. 7, Water Street, New York 4, N.Y., United States.

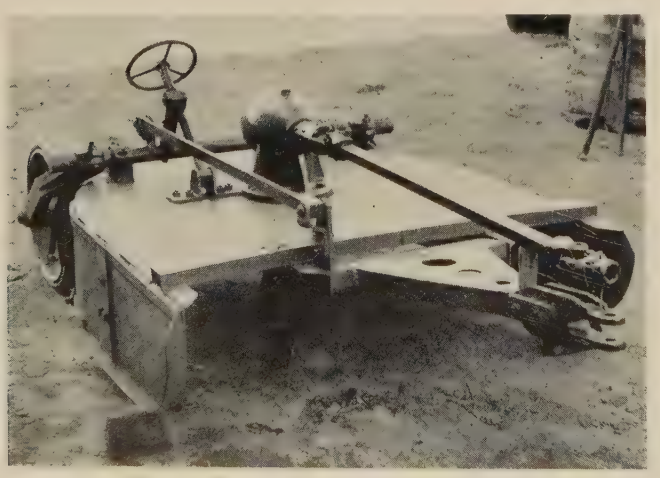

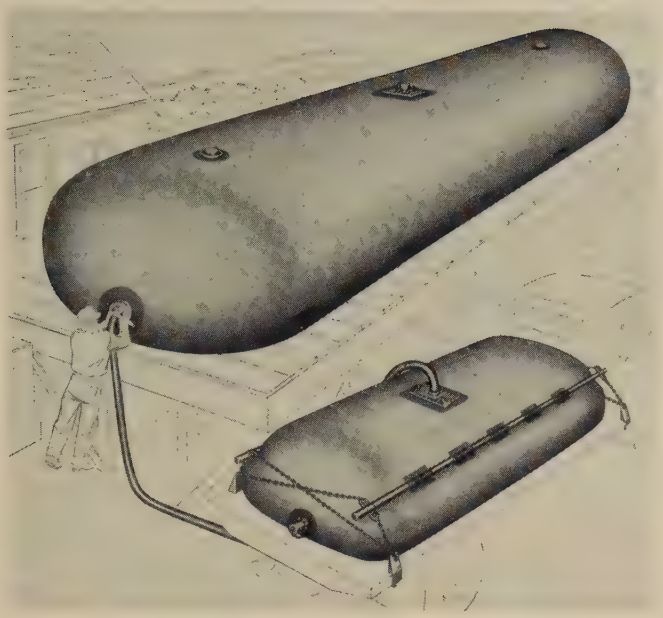

Firestone Collapsible Storage Tanks. — Tanks weigh one tenth of steel tanks. Can be quickly folded and rolled up into small bundle. Two men can load and unload 15,000 gal. (56,775 l.) tank. Extremely portable; up to 7 tanks of a 105,000 gal. total capacity (397,500 l.) carried on small truck. Built-in system of anti-roll stabilizers makes it possible to use tank even on a 20 percent grade without external supports. No air admitted to the tank where its contents are pumped out. Neofrene coated nylon fabric cannot corrode. If damage should occur, it can be repaired immediately with simple patching kit. Four sizes: 5,000-7,500-10,000-15,000 gal. (18,900-28,400-37,850-56,775 l.).

Manufacturer: Firestone International Co., Akron 17, Ohio, United States.

Stenner Saw Bench Type ARR. — Circular saw bench with saws of 26 to 30 in. (66 to 76 cm.) diam. for ripping, crosscutting, salvage operations in sawmills, preparing woodwork on building sites etc. Available with electric belt and engine drives, for stationary use or mounted on wheels. Belt-driven machines have a 3-point linkage for tractor transport. *Specifications:* max. depth of cut 11 ½ in. (29 cm.); speed of saw 1,250 r.p.m., table 4 ft. × 2 ft. (122 × 61 cm.); height of table 2 ft. 6 in. (76 cm.); electric motor 12 ½ h.p.; nett weight with motor drive 675 lb. (306 kg.).

Manufacturer: Stenners of Tiverton Ltd, Lowman Works, Tiverton, Devon, England.

Surform 2-in. Drum Cutter. — Will fit any type of power tool. Designed for shaping, planing, bevelling and rebating woods of all kind; it can be used free hand, with a drill stand, or bench clamp.

Manufacturer: Simmonds Accessories Ltd, St. James's St., London S.W.1, England.

Ackley Air Saw. — Designed for pruning, thinning and cutting brush. Various circular and chain saws can be mounted on bar 9 in. (23 cm.) in diam. which can reach 20 ft. (6.1 m.) above the ground with a 6 ft. (1.8 m.) extension. Heaviest unit weighs 7 ½ lb. (3.4 kg.). Powered by a high torque air motor located next to blade. An airflow regulator for use with smaller compressors is available.

Manufacturer: Weed Control Service, Inc. 2605, S.W. First Ave., Portland 1, Oregon, United States.

Adjustable Grooving Cutter No. 405/15. — Cuts clean and chip-free grooves with all kinds of woods. The rejecting disc being portion of the tool body ensures complete safety and non-kick-back when machining any type of groove. Setting of cutterblock for various widths of groove, irrespective of the tool diameter, can be effected within seconds with aid of gauge supplied with each cutterblock. Manufactured in several models.

Manufacturer: August Oppold Maschinen-und Werkzeug-Fabrik, Oberkochen (Württ.) W. Germany.

News of the World

Argentina

• In 1957, in connection with a report compiled by the United Nations Economic Commission for Latin America (ECLA) on the Economic Development of Argentina, FAO helped to prepare a plan for the development of the forest economy of the country. The FAO report revealed the extent of the need to curtail imports and the drain on foreign currency reserves through more intensive and efficient use of Argentina's own resources. It was formally submitted to the Argentine Government by the Director of the Forestry and Forest Products Division of FAO, and since then measures for implementing the recommendations have been worked out in detail in Argentina.

The *Administración Nacional de Bosques* (Federal Forest Service) of the Ministry of Agriculture, some provincial services and the *Bancos Industrial y de la Nación* (Industrial and National Banks) have combined their efforts in order to promote the development of existing forests, to create new forests, and to build up forest industries. The Federal Forest Service, drawing on the Forest Fund and with the assistance of the National Bank, has worked out a credit scheme for encouraging intensive forest tree planting throughout the country. Loans covering 80 percent of the materials needed are granted at an interest rate of 2 percent, repayable in 20 years. At the same time, the Service has arranged for large-scale rehabilitation works to be carried out in the most important forest region of the Republic, the Paraná delta, which last year suffered greatly from serious floods. For the afforestation program, mechanization of operations is to be promoted by facilitating the importation of dredgers, power shovels, ditchers and other machines which are essential for areas subject to floods, and which can be used for bringing into production an area of 100,000 hectares in the provinces of Buenos Aires and Entre Rios alone.

Other features of the FAO report which are being pursued relate to the opening of forestry schools, the training of forest and industrial workers, and the granting of fellowships for vocational and professional training abroad. Rationalization of the timber trade between Brazil, Paraguay, Chile and Argentina is being studied, as is the modernization of the boxboard industry. Attention is also being given to the more efficient operation of the tannin industry, the only forest industry that produces an export commodity, and of the whole sleeper (railroad ties) production business. Projects now being examined include the setting up of wood particle board plants and pulp and paper mills using the semi-chemical process.

British Guiana

• British Guiana is the only commercial source of greenheart (*Ocotea rodiaei*). Some promising work on the regeneration of this useful, although slow-growing, timber has been done. The initial experiments were described in the *Empire Forestry Review*, No. 35 (2) 1956, under the title "The regeneration of worked out greenheart forest in British Guiana." From observation of the results, the present techniques have been evolved, which are being tried out on two areas: from one, the greenheart was exploited about 30 years ago and, from the other, during 1950-52.

Treatment aims at the gradual reduction of the understory in two or three operations at two yearly intervals, so as to stimulate the growth of existing greenheart regeneration or of seedlings from the abundant supply of seed from trees which were too small for felling in the past. At the same time the undergrowth is removed — except for desirable species — until such time as it no longer interferes with regeneration. It is only in the third treatment, about four years after the start of operations, that any opening of the canopy is undertaken and then only over regeneration of 20 feet (6 meters) or more in height. For the reduction of the understory, the smaller trees are cut with a machette or ax, while the larger ones are frilled and poisoned with sodium arsenite. The subsequent removal of the canopy will be carried out by poisoning in accordance with the apparent needs of the new crop.

For purposes of record and control the area to be treated is divided into 10-acre (4-hectare) blocks. It takes the normal working gang (comprising 6-8 cutlassmen, 2 tree markers, 3-5 axmen, and 1 poisoner) from two to three days to deal with each block. The gang traverses the block, to and fro, until completed, working on a front of from 10 to 40 meters in width, depending on the nature of the forest.

Comparative measurements of regeneration made in sample plots in 1954 and 1959 show a striking increase in the number of greenheart saplings below 25 feet (8 meters) in height, even in this short interval. There are also signs that diameter growth is satisfactory. It is felt, however, that this might be improved by a judicious thinning of the regeneration at from 6 to 10 feet (2 to 3 meters) in height and that, in attempting this, the risk of some of the more slender saplings falling over could be accepted.

There is no doubt that some of the worked-out greenheart forest is being greatly improved by the treatment now being given and that the present intensive measures are preferable to the extensive ones carried out in the past. After a few more treatments, there should be an almost complete lower canopy of greenheart covering the areas dealt with.

It is too soon to pronounce on costs and the likelihood of the treatment being an economic proposition. But, as an experimental venture of considerable promise and no small silvicultural interest, it would appear to deserve to be continued and extended.

Finland

• At the Cologne furniture exhibition in 1960, 15 Finnish furniture manufacturers, members of the Council on Furniture Export Promotion, will present their furniture products for buyers to assess.

Finnish furniture exports appear to have a promising future, because of the world-wide reputation earned by Finnish design. Exports to Western Germany have been the quickest to develop, but expansion has also taken place in other countries in the Common Market area, and in the United Kingdom and America.

Finnish plywood factories are to establish an association in London to carry on market research in England and find new uses for birch plywood. Its activities will cover all sectors of English life. The association will lay special emphasis on publicity and public relations. The results of this extensive research will show the Finnish plywood indus-

COSTA RICA: *Left, primitive charcoal making in a forest of* Quercus copeyensis *on the Talamanca cordillera.* Right, *a demonstration portable kiln, furnished by FAO, in operation.*

Courtesy, A. Hyndman Stein

try what new qualities should be developed and into what new fields it should expand. The findings in the United Kingdom, which is Finland's principal export market for this commodity, can be adapted for other countries, so that the result of the work there will be of prime importance for the whole of the exports in this line.

In the peak year 1955, Finland's total exports of plywood amounted to 286,406 cubic meters. Since then the export trade has been unsatisfactory and but for the constant increase in blockboard exports, the situation would be gloomy.

The *Finnish Trade Review* says that there is no doubt that many new uses can be found for plywood, in particular in the building industry. Plywood could also become the principal material for farmers, one that they can use for all their own building and carpentry. In this case, phenol-resin glue is required, since it gives the plywood all the properties necessary for outdoor use. The Finnish factories are also concentrating on the development of specially processed plywoods. An important group is formed by surface-treated plywoods, varnished, painted or plastic coated. The purpose of such treatment is, of course, either to enhance the appearance of the plywood or to improve its range of uses and its resistance to dry rot and termites. Fireproof plywood is also on the way.

Ruanda-Urundi

• There is little left of the forest of Ruanda-Urundi, and what remains lies over 1,900 meters and is largely difficult of access, or has an essentially protective role to play. Forest covers some 3 percent of the territory, or 6.5 percent if wooded savanna is included. There is therefore no industrial exploitation or export of forest produce. The bulk of the timber needed is imported from the Belgian Congo.

Forest reserves amounting to some 155,000 hectares have been established on the Congo-Nile divide (Kibira forest), in the zone of the volcanos (National Park Albert), Waku Island, the Bururi and Kigwena forests and the forest area of Kisenyi district. Rights of usage in these reserves are respected, in regard to domestic supply of firewood from dead or fallen trees.

The savanna zone, mainly to the East of the 30° meridian, contains patchy wooded areas of scattered trees, locally exploited for fuelwood.

The Forestry Bureau was established only in 1950/51, prior to which tribal or village communities were expected to undertake afforestation at the rate of 1 hectare per 400 men per annum based on a yearly requirement of 10 cubic meters per family, to ensure local supplies of fuelwood and building poles in a country largely cleared of all tree growth, initially by a dense population of cultivators, and aggravated by a nomadic, invading tribe of cattleowners. The results were negligible and in 1952/53 an afforestation tax was levied annually, amounting to 20 to 30 francs per person, which the Forestry Bureau used for the establishment of *boisements communaux.* Approximately 46,710 hectares of such forest areas, usually in small lots varying from 5 to 100 hectares located on the poorest soils in the vicinity of a settlement, have been planted by end-1958. It must be remembered that much of the country is densely populated (an average of 90, and as high as 400 people, per square kilometer); that every available piece of fertile land, even on extreme slopes, is under permanent agriculture, and that the enormous livestock population is still rarely killed for meat but is considered principally as a producer of milk, requiring considerable areas of the poorer soils for pasturage. The land allocated to communal forests is delimited annually by a council of local chiefs, with the help of technical advice so as to avoid undue fragmentation and unmanageably small or inaccessible areas.

The Forestry Bureau disposes of funds from Government for *reboisements économiques* for the supply of local industrial needs of timber. The right of use of suitable, available land for this purpose is bought but the land itself remains the property of the tribal collectivity. Some 2,260 hectares have been established up to end-1958.

The communal afforestation scheme continues, and where better pasturage is made available, the "Anderson" group-planting method with wide spacing will in time be adopted to ensure multiple use.

Some excellent progress has been made in resettlement of peasant populations, notably in the Ruzizi Valley and around Astrida, where *paysannats* include, in the first case, a 40-ares timber-plot next to the residential plot in each 4 hectares strip individually and permanently allocated; and in the second case, separate communal forest and pasturage areas within a complex of *paysannats* involving an average of 5,000 families, a social center, a coffee-berry depulper, a dipping tank, piped water every 2 kilometers along access roads, etc.

Contrary to the initially adverse effect of selfgovernment in many countries, it would appear that the trend, giving greater representation to the original Bahutu cultivators and reducing the authority and land-monopoly of the invading and conquering hamitic Batusi, will favor afforestation projects and settled mixed farming under individual ownership at the expense of extensive, nomadic cattle breeding.

SARAWAK: *A raft of ramin logs with a typical riverine background of nipa palm. The logs are brushed with a creosote mixture at forest landings to prevent insect infestation but the treatment is ineffective against fungal stain. The nonsubmerged parts of ramin logs are therefore liable to develop blue-stain during extended periods of storage in water.*

Courtesy, M. N. Gallant

Sarawak

• An FAO technical assistance officer broadcasting from Kuching described the present prospects for ramin timber (*Gonystylus* spp.).

"There is quite a demand in Europe for woods that are light to moderately light in weight and whitish to yellowish white in color. There are not a great number of such woods available from the tropics. Wawa or Obeche from West Africa is one of them. Assacu or Hura from South America is another. And there is ramin of course, almost all of which comes from Sarawak. Ramin is a little heavier than the others, not quite as soft and is finer grained. The three timbers are competitive to a certain extent, but ramin can be used for more exacting work and the market is prepared a little more for it.

Ramin is really quite an outstanding timber on a number of counts. It machines very nicely, so that it can be used for fine moldings; it finishes well and takes paint easily, and it behaves well after manufacture, which is to say that it does not warp and shrink as much as many of its competitors. Then again, the long clear specifications in which it is obtainable makes it a very popular timber. By comparison, the temperate pines and hardwoods such as beech and birch that compete with ramin are marketed as a rule in more defective specifications than ramin, with more knots and other blemishes.

The uses to which ramin is put vary to a certain extent from country to country. In the United Kingdom, it serves as a good grade utility wood, most of it going to furniture and interior fittings. But a good deal of it also goes into moldings, broomsticks and so on. Most of the ramin that reaches Germany is used for making moldings and very little of it goes into furniture. In the case of Italy, almost four fifths of the ramin that is imported finds its way into the manufacture of slats for Venetian blinds. And in Japan and Australia, it is turned into veneer and plywood.

Sales to Europe have been expanding during the past years. More sawnwood is being purchased by the United Kingdom, Germany, Netherlands, etc., more ramin logs are being taken up by Italy. The Sarawak ramin trade now has plenty of experience of world market conditions, and is aware that a firm and steady market can be ensured by sensible selling through reliable agents abroad.

The technique of extraction of ramin by light rail through swamp that has been developed in Sarawak enables the timber to reach sawmill and port at moderate cost. It was the development of this technique that made it possible to market ramin overseas.

The strong entry of Japan into the Sarawak log market is almost certainly due to events in the Philippines. Japan has been a tremendous purchaser of lauan from the Philippines, and this lauan has been the mainstay of the Japanese export plywood trade, which is for the greater part with the United States. The Philippines is now building up its own plywood industry and needs the logs once exported to Japan. Over a period of five years, the Philippines intends reducing log exports, particularly of veneer quality, by 50 percent. Japan is looking elsewhere in Southeast Asia for logs to replace the falling Philippine supply. Great quantities are being obtained from North Borneo, Viet-Nam, Thailand and Indonesia. Provided Sarawak can supply Japan with the kind and specification of logs that she needs and at prices that are competitive, there seems to be no reason why the present level of log purchases from Sarawak should not continue, and even increase."

Sweden

• A news item from Sweden states that 137 amateur pilots flying 41 private aircraft from altogether 12 aero clubs took part in the forest fire supervision of north and central Sweden during the fire season of 1959. They flew a total of 4,757 hours and spotted no less than 508 fires on the controlled area of 212,000 square kilometers (83,000 square miles), nearly half of Sweden.

The scheme of employing private aircraft in fire detection was started in 1955 by the Royal Swedish Aero Club, and supervision, normally handled by ground spotters in high towers, has now been partly taken over by the sports flying clubs, which thereby gain a specific purpose for their flying.

Each club is responsible for its own district and organizes a voluntary flying group of three to six aircraft. The leader of the group decides whether it is necessary to fly or not, or how often, according to the fire risk values broadcast every morning by Radio Sweden. The clubs arranging the flights also receive weather reports from local meteorological observers.

Club members who carry out the flights are unpaid but they get the opportunity of free of charge training flights and the forest owners obtain the service from the clubs at low cost.

Although a regular fire detection system from the air has been carried out in Canada for some 20 years, a Canadian study group last summer visited Sweden in order to study the Swedish organization.

Togo

• In *Unasylva* Volume 13, Number 3, a set of three stamp designs was shown on page 171. The stamp issued by the Autonomous Republic of Togo was said to depict African "teak" (*Chlorophora excelsa*). In fact, it depicts a plantation of true Teak (*Tectona grandis*), first intro-

duced into the territory in 1905 from Thailand. An interesting article on the teak plantations in Togo is contained in the review *Bois et Forêts des Tropiques*, No. 49, 1956.

Union of Soviet Socialist Republics

• A description of the forest classification system for management purposes used in the U.S.S.R. was given in a news note in *Unasylva*, Vol. 9, No. 1. An article in *Lesnoie Khozyaistvo* (Forestry Economics) for December 1959, outlines the program to be followed in 1960. The cutting targets are shown in the Table.

U.S.S.R. Cutting Targets for 1960

Group	Type	Management purpose	Million m³
I	Mainly protection forests	Maintenance cutting	15
II	Mainly western forests and steppes	Main cutting	116.7
		Improvement fellings	22
		Other cutting	15
III	Eastern forests	Main cutting	230
			398.7

In spite of restricted cutting in certain of the republics, the figure of 116.7 million cubic meters for group II represents an 18 percent increase over the target set, and attained, for 1959.

Management plans are to cover some 39.4 million hectares, of which 38.4 million are state forests, 702,000 hectares *kolkhoz* forests, and 356,000 hectares are forests for which certain ministries or other institutions are directly responsible. For two thirds of this area, management plans are to be drawn up for the first time: over the remainder, revision of earlier working plans is to be undertaken.

Silvicultural operations (reforestation of existing forests by seeding and planting or by natural regeneration, and afforestation of bare land) are to be carried out on 1,557,000 hectares of state forests, half through natural regeneration methods. On land belonging to the *kolkhoz*, afforestation of bare lands (sandy soils and gulleys) will cover 93.5 million hectares, as compared with 80.2 million in 1958.

The article makes reference to the fact that: " Shelterbelts are an efficient and permanent means of combating erosion and drought, and of increasing crop yields. Lately, however, the attention of the organizations responsible for them has slackened somewhat. Whereas in 1950/53 shelterbelts were planted at a yearly average rate of 298,000 hectares, the figure for 1955/57 was down to 28,000 hectares, declining further to 22,500 hectares in 1958. An increase was envisaged for 1959 up to 46,300 hectares and 97,260 hectares in 1960."

The number of workers engaged in felling and extraction (but not in forest industries) will be 475,000 for 1960, with a total wage figure of over 2,700,000 roubles. The gross revenue from forest output is expected to amount to 2,254 million roubles, of which 1,947.5 million will come from stumpage taxes. Costs, however, are expected to be of the order of 2,500 million roubles, so that there will be a deficit of 200 to 300 million roubles which, it is explained, is due to stumpage rates being too low.

United Kingdom

• During the summer of 1959, Professor Sir Harry G. Champion, then Director of the Forestry Institute at Oxford, introduced a valuable innovation by organizing, with the assistance of Mr. J. J. MacGregor, Forest Economist at the Institute, a special course on Land Use for Forestry and Agriculture, for postgraduates. The course attracted attendance from many countries of the Commonwealth — Australia, Canada, Ceylon, India, Malaya, Nigeria, Pakistan, Rhodesia, Somaliland and the United Kingdom, and officers from the United States of America and from FAO also took part. Originally, it had been hoped to have more participants who were directly associated with agriculture and particularly administrators responsible for land use, but most of those who joined the course were, in fact, foresters.

The first week was devoted to a seminar at Oxford on the theoretical aspects of land use, during which papers were presented by 18 invited specialists. The subject matters covered were grouped into three categories:

1. Land potentialities and needs
2. Techniques for the maintenance and enhancement of productivity
3. National policies and legislation

Under the first heading the physical factors, geological and soil potentialities, social needs and biological and economic relationships were discussed. Under the second, aspects of soil conservation and reclamation, animal and crop husbandry, forestry techniques, and the use of aerial photography in conducting modern land-use surveys were considered. In the third category, attention was given to organizational and administrative problems and especially to the problems of implementing programs in the developing countries where long established social patterns are now in process of rapid change.

There was a keen and sustained element of professional criticism throughout the seminar and the individual points of view expressed by different speakers expressed many different aspects of the whole land-use problem. Sir Harry Champion, speaking on multiple use, summarized the foresters' approach. Foresters, he observed, may rightfully resent seeing the dwindling remnants of forests vitally needed for protective and productive purposes, still being treated as a general land reserve. Likewise, they may also be justified in showing lack of enthusiasm when carefully managed forest lands are withdrawn from their control for such purposes as National Parks or nature reserves. On the other hand, it has come to be acknowledged that the forester has a duty to posterity for the maintenance of natural vegetation areas with their dependent animal life. He has also to concede that there are other major land-uses such as arable farming and pasture, water collection and conservation, mining for minerals, production of raw materials for industry, and recreational uses, that may have to be combined with forestry, requiring under certain circumstances that land be used for two, perhaps even more, purposes either at the same time or successively, as in the case of shifting cultivation.

From the foresters' point of view the land capability of lands devoted to forestry use is controllable through fellings, choice of species, use of fire, grazing of domestic animals, wild animal stocking, roads and buildings, and public access. By the control of these items, soil and water con-

servation is affected, vegetation type and structure may be changed, the quality and quantity of timber may be improved or increased, the grazing and forage supplies for domestic livestock and wildlife may be brought into balance, and recreational and amenity values be created or enhanced.

Although the concept of multiple use was here to stay, current thinking was that high-quality livestock and good forest on the same site were incompatible; that wooded pastures were probably best assigned primarily to produce timber; that wildlife protection can be too successful; that the exclusion of cutting often runs counter to the use of a forest for any other purpose; that there is a vital relationship between vegetal cover and water supplies; and that the recreational use of forests is educating the public to the value of forestry.

Following the interesting week on theory at Oxford, the group studied examples of land-use patterns and practices in Wales, England, Switzerland, northern Italy, and southern France.

In the United Kingdom, successful afforestation projects following opencast coalmining were visited. This use of the land for forestry purposes was compared with sheep farming on similar poor hill land. It was shown that in these instances the use of the land for forestry was in the long run economically and socially more desirable. The forests would eventually provide employment for more people, establishing an economic base for sustained community development and social improvement. Other varied problems of land use that were studied, related to recreational forests located near urban centers, afforestation versus grassland cover on catchment areas (watersheds) for urban water supplies, and afforestation versus improved agricultural uses.

In Switzerland, very intensive land-use patterns were seen. Outstanding examples of good planning for maximum economic returns from the land were the belts of poplars near Lake Neuchatel, field crops protected by shelterbelts growing on drained marsh lands at the head of the lake, and silvo-pastoral developments in the Jura region that were effectively separating forest use from pasture use, to the marked improvement of both.

Land reform projects were visited in Italy. The land reform program has brought into agricultural production extensive areas that were previously used mainly as seasonal grazing grounds. Under the guidance of professionally trained agriculturists and extension workers, the farmers located on these reclaimed lands are harvesting bumper field and horticultural crops. Work supervised by the Department of Forestry and Mountain Economy was seen in the mountainous regions of the country. Outstanding were torrent control structures, mountain terracing, and afforestation projects. Applied research projects designed to assist in the solution of the land-use and economic problems of mountain villages were explained at the Alpine Experiment Station above Turin. Also visited in this alpine area were the extensive new winter sports and summer recreational developments, such as have now become a definite part of the land-use economy in numerous mountainous regions of Europe.

Officials in France outlined the major objectives of their country's land-use program which are:

1. to increase the total acreage of forest cover;
2. to improve pasture and range management;
3. to protect soils against accelerated erosion;
4. to base land-use programs on the results of carefully conducted research studies.

Among the projects visited were the canal works and pumping station of the Bas-Rhône-Languedoc irrigation project, the experimental planting of new chestnut groves in connection with a watershed and rural development scheme at Le Mas Soubeyron, and a permanent forest originally planted on overgrazed mountain pastures. This forest is now providing a village with a regulated water supply and a sustained income from forest products. Of special interest was a co-operative afforestation scheme seen at La Salvetat. The landowners had pooled their lands in order to create a forest area of sufficient size to be economically profitable. Each owner will share in the profits from the forest to the extent of his proportional ownership.

The last day of the tour in Europe, five weeks after the course started, was used for conference room discussions, each member of the course presenting a paper on a previously assigned land-use subject. There was a general summing-up, and the participants dispersed with their mental horizons, it is hoped, substantially widened.

United States of America

• Although direct seeding is not a panacea for all forest regeneration problems, it is clear that some sites lend themselves well to regeneration by seeding. How to recognize the potential in such areas, how to prepare the seed and the site, how to protect seeds against insects and disease and other destructive agents, as well as how, when and where to use the method and how to evaluate the results, are presented in an informative and helpful publication entitled *Direct Seeding in the South*. This is the report of a symposium organized by the School of Forestry of Duke University, Durham, North Carolina, in 1959.

• In *Essentials of Forestry Practice* (Charles H. Stoddard, Roland Press Co., New York, 1959) the author relates the purposes and theoretical working methods of forestry to practical forest management. He makes a very successful effort to translate forest research results, and practice based on research, into terms which can be readily grasped by students in technical and vocational schools, and in farm forestry courses in agricultural colleges. Forest landowners and managers will also find this book of use, particularly the parts relating to forest business-record keeping, small forest management plans and marketing of forest products.

The illustrations both in the form of photographs and diagrams are especially helpful, and the appendix includes a forest terminology, characteristics of important commercial timber species, forest management plans for small properties, and timber sale and operating agreement forms.

• *Forest Fire Control and Use* (Kenneth P. Davis, with chapters by George M. Byram and W. R. Krumm, American Forestry Series, McGraw-Hill Book Co., New York, 1959) brings up to date the continuous struggle to relate forest fire control facts and practices to the ever increasing findings of research. The author hopes that the book will serve as an aid to the forestry school teacher and as a reference guide to the practitioner; it should also help students and administrators to make better use of local manuals and handbooks.

The reader is reminded that the application of fire control techniques involves an understanding of such diverse disciplines as meteorology, engineering, logistics, communication, transportation, law enforcement, training administration, and public education. The author pays tribute to the men of the United States Forest Service "who through pioneering experience and creative research have formed the art and science of forest fire control."

PUBLICATIONS FOR REFERENCE

The Oxford System of Decimal Classification for Forestry

Prepared by the Joint FAO/IUFRO Committee on Bibliography in collaboration with the Commonwealth Forestry Bureau, Oxford, England, and recommended by the Conference of FAO and the Congress of the International Union of Forest Research Organizations for adoption by member countries.

English version

Published by: The Commonwealth Agricultural Bureaux (on behalf of IUFRO), Central Sales Branch, Farnham Royal, England.

10s. 0d. per copy, post free; interleaved copies 12s. 6d. post free

German version

Published by: Deutsche Zentralstelle für forstliche Bibliographie, Freiburg i. Br., Bertoldstrasse 17, W. Germany.

10 DM per copy, post free; interleaved copies 12 DM post free

Spanish version

Published by: Comisión Española de Bibliografía y Terminología Forestal. Copies obtainable from: Instituto Forestal de Investigaciones y Experiencias, Apartado Número 8.111, Madrid; or from Librerías Espasa Calpe y Agrícola, Madrid.

150 pesetas (133 pages with paper cover)

French version

Published by: L'Ecole des Eaux et Forêts, 14, rue Girardet, Nancy, France.

16 new francs post free

FAO Mediterranean Development Project

The Integrated Development of Mediterranean Agriculture and Forestry in relation to Economic Growth - A Study and Proposals for Action

This report grew out of a series of studies and intergovernmental consultations undertaken over the last few years on the problems of agriculture, forestry and general economic development in the countries of the Mediterranean region. It is a general analysis of the problem of accelerated development of land and water resources in the area and its economic, technical and social implications. It deals with the formulation of appropriate policies and programs for the next twenty years and makes specific recommendations for action at national, international, regional and subregional levels. Summaries of the ten country studies are given in the over-all report and the full texts are available separately, on request, in mimeographed form in the languages in which they were prepared.

Over-all report $2.00 or 10s. 0d.

SALES AGENTS FOR FAO PUBLICATIONS

Argentina	Editorial Sudamericana, S. A., Alsina 500, Buenos Aires.
Australia	Melbourne University Press, 369 Lonsdale Street, Melbourne, C.1.
Austria	Wilhelm Frick Buchhandlung, Graben 27, Vienna 1.
Belgium	Agence et Messageries de la Presse, 14-22 rue du Persil, Brussels.
Bolivia	Librería y Editorial "Juventud," Plaza Murillo 519, La Paz.
Brazil	Livraria Agir, Rua Mexico 98-B, Rio de Janeiro.
Burma	(*Wholesale*) Orient Longmans Private Ltd., 17 Chittaranjan Avenue, Calcutta 13, India.
Canada	Queen's Printer, Ottawa.
Ceylon	M. D. Gunasena and Co. Ltd., 217 Norris Road, Colombo 11.
Chile	Sala y Grijalbo Ltda., Bandera 140-F, Casilla 180D, Santiago.
Colombia	"Agricultural Tropical," Carrera 13, No. 13-17, Bogotá; Librería Central, Calle 14, N. 6-88, Bogotá.
Costa Rica	Imprenta y Librería Trejos, S.A., Apartado 1313, San José.
Cuba	René de Smedt, La Casa Belga, O'Reilly 455, Havana.
Denmark	Ejnar Munksgaard, Norregade 6, Copenhagen K.
Ecuador	"La Hacienda," Escobedo No. 1003 y P. Icaza, Casilla No. 3983, Guayaquil; Librería Muñoz Hnos. y Cía., Apartado 522, Quito.
El Salvador	Manuel Navas y Cía., 1ª Avenida Sur 35, San Salvador.
Ethiopia	International Press Agency, P. O. Box No. 120, Addis Ababa.
Federation of Malaya	Caxton Stationers Ltd., 13 Market Street, Kuala Lumpur.
Finland	Akateeminen Kirjakauppa, 2 Keskuskatu, Helsinki.
France	Les Editions A. Pedone, 13 rue Soufflot, Paris 5e.
Germany	Paul Parey, Lindenstrasse 44-47, Berlin SW 61.
Greece	"Eleftheroudakis," Constitution Square, Athens.
Guatemala	Sociedad Económico Financiera, Edificio Briz, Despacho 207, 6ª Av. 14-33, Zona I, Guatemala.
Haiti	Max Bouchereau, Librairie "A la Caravelle," B. P. 111B, Port-au-Prince.
Hong Kong	Swindon Book Co., 25 Nathan Road, Kowloon.
Iceland	Halldor Jonsson, Mjostraeti 2, Reykjavik; Jonsson & Juliusson, Garöastraeti 2, Reykjavik.
India	(*Wholesale*) Orient Longmans Private Ltd., 17 Chittaranjan Avenue, Calcutta 13; Nicol Road, Ballard Estate, Bombay 1; 36-A Mount Road, Madras 2; Kanson House, 24/1 Asaf Ali Road, Post Box 386, New Delhi; Gunfoundry Road, Hyderabad 1; (*Retail*) Oxford Book and Stationery Co., Scindia House, New Delhi; 17 Park Street, Calcutta.
Indonesia	Pembangunan Ltd., 84 Gunung Sahari, Djakarta.
Iraq	Mackenzie's Bookshop, Baghdad.
Ireland	The Controller, Stationery Office, Dublin.
Israel	Blumstein's Bookstores Ltd., P. O. Box 4101, Tel Aviv.
Italy	Libreria Internazionale U. Hoepli, Galleria Piazza Colonna, Rome; A.E.I.O.U., Via Meravigli 16, Milan.
Japan	Maruzen Company Ltd., 6 Tori-Nichome, Nihonbashi, Tokyo.
Korea	The Eul-Yoo Publishing Co., Ltd., 5, 2-Ka, Chong-ro, Seoul.
Mexico	Manuel Gómez Pezuela e Hijo, Donceles 12, Mexico, D. F.
Morocco	Centre de Diffusion Documentaire du B.E.P.I., 8 rue Michaux-Bellaire, Rabat.
Netherlands	N. V. Martinus Nijhoff, Lange Voorhout 9, The Hague.
New Zealand	Whitcombe and Tombs Ltd., Auckland, Wellington, Hamilton, Christchurch, Dunedin, Invercargill, Timaru.
Norway	Johan Grundt Tanum Forlag, Kr. Augustsgt. 7ª Oslo.
Pakistan	*East*: Orient Longmans Private Ltd., 17 Nazimuddin Road, Dacca. *West*: Mirza Book Agency, 9-A Shah Alam Market, Lahore.
Panama	Agencia Internacional de Publicaciones, J. Menéndez, Plaza de Arango No. 3, Panama.
Paraguay	Agencia de Librerías de Salvador Nizza, Calle Pte. Franco No. 39-43, Asunción.
Peru	Librería Internacional del Peru, S. A., Casilla 1417, Lima.
Philippines	The Modern Book Company, 518-520 Rizal Avenue, Manila.
Poland	Ars Polona, Krakowskie Przedmiescie, 7, Warsaw.
Portugal	Livraria Bertrand, S.A.R.L., Rua Garrett 73-75, Lisbon.
Spain	José Bosch Librero, Ronda Universidad 11, Barcelona; Librería Mundi-Prensa, Castelló 37, Madrid; Librería General Indipendencia, 8, Saragossa.
Sweden	C. E. Fritze, Fredsgatan 2, Stockholm 16; Gumperts A. B., Göteborg; Henrik Lindstahls Bokhandel, Odengatan 22, Stockholm.
Switzerland	Librairie Payot, S. A., Lausanne and Geneva; Hans Raunhardt, Kirchgasse 17, Zurich 1.
Taiwan	The World Book Company Ltd., 99 Chungking South Road, Section 1, Taipeh.
Thailand	Requests for FAO publications should be addressed to: FAO Regional Office for Asia and the Far East, Maliwan Mansion, Bangkok.
Tunisia	Victor Boukhors, 4 rue Nocard, Tunis.
Turkey	Librairie Hachette, 469 Istiklal Caddesi, Beyoglu, Istanbul.
Union of South Africa	Van Schaik's Book Store, Pty., Ltd., P. O. Box 724, Pretoria.
United Arab Republic	Librairie de la Renaissance d'Egypte, 9 Sh. Adly Pasha, Cairo.
United Kingdom	H. M. Stationery Office P. O. Box 569, London S. E. 1.
United States	Columbia University Press, International Documents Service, 2960 Broadway, New York 27, N.Y.
Uruguay	Hector d'Elia, Oficina de Representación de Editoriales, Plaza Cagancha 1342, Montevideo.
Venezuela	Suma, S. A., Sabana Grande 102, "El Recreo," Caracas.
Yugoslavia	Drzavno Preduzece, Jugoslovenska Knjiga, Terazije 27/11, Belgrade; Cankarjeva Zalozba, P. O. Box 41, Ljubljiana.
Other countries	Requests from countries where sales agents have not yet been appointed may be sent to: Distribution and Sales Section, Food and Agriculture Organization of the United Nations. Viale delle Terme di Caracalla, Rome, Italy.

FAO publications are priced in U.S. dollars and pounds sterling. Payment to FAO sales agents may be made in local currencies.

TIPOGRAFICA CASTALDI - ROMA - 1960